# ILLUSTRATED PARTS LIST
# LISTE DES PIECES

Kubota

MODEL
MODELE

## T720

# POWER TILLER
# MOTOCULTEUR

EUROPE

Kubota

97898-40430

## Notice

This Parts List is for the following purposes.
Do not lose this Parts List.

1. When ordering parts, check with this Parts List to confirm the code number and the name of parts.
2. When making repaires of the T 7 2 0, refer to the illustrations in this Parts List.

## Instructions

1. Parts designated "Commander par REF. No. . . . ." in the " Code No. " column are parts to be procured locally or are parts sold included in the assembly. Kubota does not sell these parts separately.
2. Circled numbers in the "REMARKS" column indicate reference numbers which are included in "Assy".
   Therefore, when "ASSY" is ordered, the parts designated by "Reference Nos." in the "REMARKS" column would be included in your order.
3. Newly redesigned, modified parts shall have figures in the "REF No." column encircled.
4. Parts which are not interchangeable because of design modification are indicated in the following manner.
   1) The "SERIAL NUMBER" column, shows tiller or engine serial numbers with the applicable code numbers.
      The numbers in the "IC No." (Interchangeable Code Numbers), are last figure of code numbers of parts which are interchangeable, and should be ordered with figures in "CODE No." column.
   2) The symbols on the left end in the "REMARKS" column are as follows.
      A: Newly adopted parts or parts whose code number has been completely changed.
      B: Changes in shape.
      C: Other changes.
   3) The column on the right of the illustration gives brief explanation of modifications.
5. When parts of the machine are modified, there will be a change in the code numbers for the parts, Revised pages of this Parts List will be issued carrying the new code numbers so replace the existing page with the newly issued page.
6. The symbols in the "S" column are symbols used by manufacturer in the control of parts.

## NOTE

Utilisation de ce livre

1. A la commande d'une pièce, chercher le No. de code et le nom de la pièce.
2. Pour les réparations de T7 2 0, employez les illustrations.

## INSTRUCTION

1. Les pièces désignées "commander par REF. No. . . . ." dans la colonne des "Code No." ne peuvent pas être vendues a l'unité.
2. Les numeros cerclés dans la colonne des "Remarques" signifient les Ref. No. qui forment l'ensemble des grosses pièces.
3. Les Ref. No. cerclés sont pour les pièces modifiées et redessinées.
4. Les pièces sans échangeabilité a cause du redessin et la modification sont indiquées par la suivante.
   1) Le numéro dans la colonne "Numéro de série" signifient le numéro de série du ou du moteur applicable. Le numéro dans la colonne de "EC No. (Echangeabilité No.)" coïncide avec le dernier chiffre du numéro de code.
   2) Les symboles à côté gauche de la colonne des "Remarques".
      A: La pièce est nouvellement adaptée. Ou le No. de code se trouve complètement changé.
      B: Le changement de la dimension.
      C: D'autres modifications.
   3) Dans la colonne à côté droit de l'illustration, il y a l'explication simple de la modification de la pièce.
5. Si une pièce est modifiée, la nouvelle page correspondante vous sera envoyée.
6. La colonne de "S" est uniquement pour notre usage.

## ― 注　　意 ―

此の部品表は大切に保存をして，次の様な場合に利用して下さい。

1．部品を注文される時に此の部品表で，コードNo.及び部品名を確認して下さい。

2．修理をされる時に此の部品表のイラストを参照して下さい。

## 記載内容の説明

1．“Code No.”欄に“commander par REF. No.……”と記入してあるのは現地調達品又は完備品の構成部品であって，夫々単体販売しない部品を示します。

2．“REMARKS”欄の中に○で囲んだ数字は完備品の構成部品の“REF. No.”を示します。

3．新変更部品の“REF. No.”を○で囲んで表示します。

4．設計変更により新旧兼用出来ない部品は次の表示をします。

1）“SERIAL NUMBER”欄は変更部品が使用出来る耕うん機本体の機番或は搭載エンジンの機番の範囲を示します。

“IC No.”欄の数字は機番に対応するコードNo.の最後の数字を示しますので該当するコードNo.で注文して下さい。

2）“REMARKS”欄の左端に次の記号で表示します。

A：部品の新採用或はコードNo.が全く変更された事を示す。

B：部品の形状が変った事を示す。

C：其の他の理由による部品の変更を示す。

3）イラストの右側の欄には部品変更の内容を略記してあります。

5．変更部品が生じた時には改訂ページを発行しますから旧ページと入れ替えて下さい。

6．“S”欄の記号はメーカーの部品管理の記号です。

# Table Des Matieres
# Contents


[GN250-TS] Page

1. CYLINDER ..... 1
   CYLINDER GROUP
2. CLAPET ..... 2
   BREATHER GROUP
3. FILTRE A AIR ..... 3
   AIR CLEANER GROUP
4. SILENCIEUX ..... 4
   MUFFLER GROUP
5. ARBRE A CAME ..... 5
   CAMSHAFT GROUP
6. VILEBREQUIN ..... 6
   CRANKSHAFT GROUP
7. FILTRE ET ROBINET ESSENCE ..... 7
   FUEL FILTER GROUP
8. REGULATEUR LEVIER ..... 8
   GOVERNOR LEVER GROUP
9. LANCEUR ..... 9
   RECOIL STARTER GROUP
10. VOLANT MAGNETIQUE ..... 10
    MAGNETO GROUP
11. CARTER ..... 11
    SPIRAL CASE GROUP
12. CARBURATEUR ..... 12
    CARBURETTOR GROUP

[T720-FR]

13. BOITE DE VITESSES ..... 13
    TRANSMISSION GROUP
14. POIGNEE DEPORT ..... 15
    MAIN CLUTCH GROUP
15. BOITE DE VITESSES ..... 16
    MISSION GEAR GROUP
16. AXE HEXAGONAL ..... 18
    WHEEL GROUP
17. CHANGEMENT 1 ..... 19
    CHANGE GROUP 1
18. MANCHERON ..... 21
    HANDLE GROUP
19. CHANGEMENT DE VITESSES ..... 22
    CHANGE GROUP
20. MARQUE ..... 23
    LABEL GROUP
21. SUPPORT MOTEUR ..... 24
    FRONT FRAME GROUP
22. CAPOT-RÉSERVOIR ..... 26
    BONNET GROUP
23. COURROIES & CARTERS ..... 28
    PULLEY BELT GROUP
24. ACCESOIRES ET PIECES DE SERVICE ..... 30
    ACCESSORIES AND SERVICE PARTS

INDEX NUMÉRIQUE ..... 31
NUMERICAL INDEX

# 1. CYLINDER
## CYLINDER GROUP

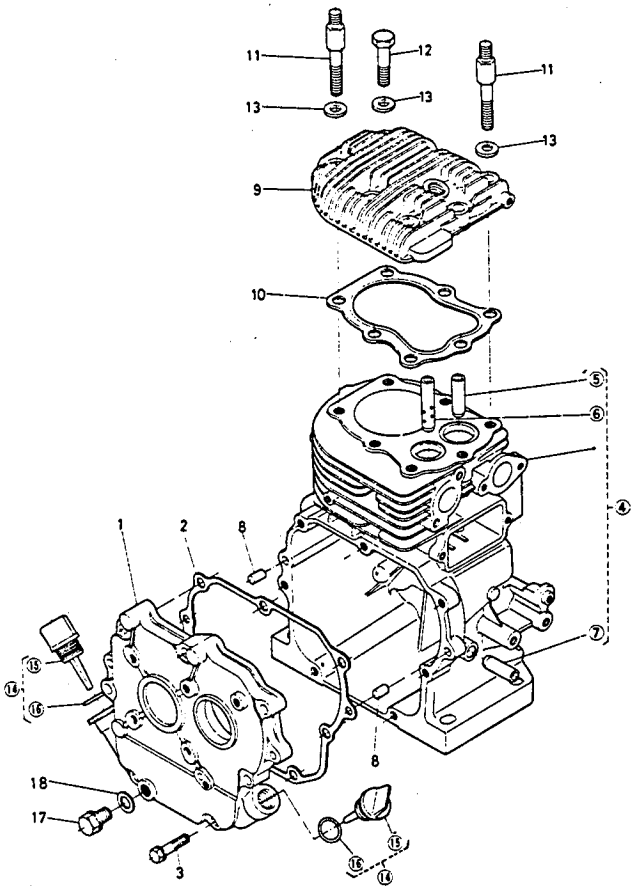


REF. No. ① 13641-0131-9

REF. No. ③
- Trou pour installer la bobine
- Thread for fit up coil

13641-0211-9

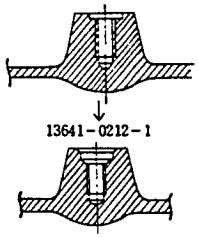


REF. No. ⑮ 13641-3315-0
⑲ 13641-3317-0

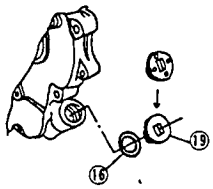


| S | REF. No. | CODE No. | DESCRIPTION FRANÇAIS | DESCRIPTION ENGLISH | UNITÉ UNIT | ÉCHANGEABILITÉ INTERCHANGEABILITY EC No. IC No. | NUMÉRO DE SÉRIE SERIAL No. | REMARQUES REMARKS |
|---|---|---|---|---|---|---|---|---|
| □ | 1 | 13641-0131-0 | Carter de distribution | CRANK CASE 2 | 1 | | ~11810 | |
| | | 13641-0132-0 | | | | | 10001~ | B |
| | 2 | 13641-0134-0 | Joint | PACKING, side cover | 1 | | | |
| | 3 | 01120-50835 | Boulon | BOLT | 7 | | | |
| □ | 4 | 13641-0211-0 | Cylinder complet | COMP CYLINDER | 1 | | ~11310 | |
| □ | | 13641-0212-0 | | | | | 10001~12160 | C ⑤~⑦ |
| | | 13641-0212-5 | | | | | 10001~ | B |
| | 5 | 13291-1354-0 | Guide | GUIDE, inlet valve | 1 | | | |
| | 6 | 13278-1356-0 | Guide | GUIDE, exhaust valve | 1 | | | |
| | 7 | 13641-5623-0 | Support | HOLDER, fork lever | 1 | | | |
| | 8 | 13325-9451-0 | Goujon de centrage | PIN, straight | 2 | | | |
| | 9 | 13641-0311-0 | Culasse | CYLINDER HEAD | 1 | | | |
| | 10 | 13641-0331-0 | Joint | GASKET, cylinder head | 1 | | | |
| | 11 | 13644-0346-0 | Boulon | BOLT, head | 3 | | | |
| | 12 | 01153-51045 | Boulon | BOLT | 4 | | | |
| | 13 | 13641-0354-0 | Rondelle | WASHER, plain | 7 | | | |
| | 14 | 13641-3308-0 | Bouchon complet | ASSY PLUG, oil filler | 1 | | ~11810 | ⑮~⑯ |
| | | | | | 2 | | | |
| | 15 | 13641-3314-0 | Bouchon | PLUG, oil filler | 1 | | 11811~ | |
| | | | | | 2 | | | |
| □ | 16 | 13641-3315-0 | Joint | PACKING | 1 | | ~10060 | |
| ○ | | 04811-00180 | Joint caoutchouc | O RING | 1 | | 10061~11810 | B |
| | | | | | 2 | | 11811~ | C |
| | 17 | 13641-3375-0 | Bouchon de vidange | PLUG, drain | 1 | | | |
| | 18 | 04711-00120 | Joint | PACKING | 1 | | | |
| □ | 19 | 13641-3317-0 | Bouchon | PLUG, blind | 1 | | ~10310 | |
| | | 13641-3317-2 | | | | | 10001~11810 | B |

# 2. CLAPET BREATHER GROUP

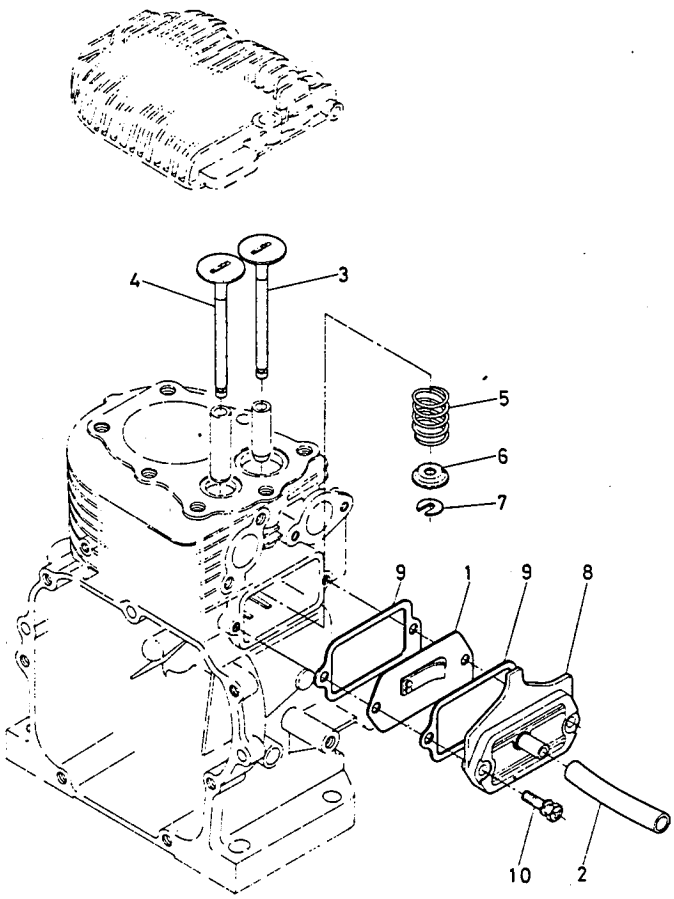


REF. No. 3 13641-1311-2

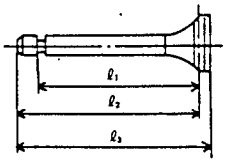


$\ell_1$ : 96.5 → 96.3mm
$\ell_2$ : 101.5 → 101.3mm
$\ell_3$ : 103.2 → 103mm

REF. No. 3 13641-1312-2

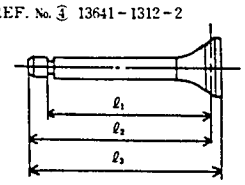


$\ell_1$ : 96.5 → 96.3mm
$\ell_2$ : 101.5 → 101.3mm
$\ell_3$ : 103.7 → 103.5mm

| S | REF. No. | CODE No. | DESCRIPTION FRANÇAIS | DESCRIPTION ENGLISH | UNITÉ UNIT | ÉCHANGEABILITÉ INTERCHANGEABILITY EC No. IC No. | NUMÉRO DE SÉRIE SERIAL No. | REMARQUES REMARKS |
|---|---|---|---|---|---|---|---|---|
| | 1 | 13641-0501-0 | Clapet complet | ASSY BREATHER | 1 | | | |
| | 2 | 13644-0551-0 | Tube caoutehouc | PIPE, breather | 1 | | | |
| □ | 3 | 13641-1311-0 | Soupape admission | VALVE, inlet | 1 | | ~11310 | |
| | | 13641-1311-2 | | | | | 10001~ | C |
| □ | 4 | 13641-1312-0 | Soupape échppement | VALVE, Exhaust | 1 | | | |
| | | 13641-1312-2 | | | | | | C |
| | 5 | 13641-1324-0 | Ressort | SPRING, valve | 2 | | | |
| | 6 | 13641-1333-0 | Couplle | RETAINER, valve spring | 2 | | | |
| | 7 | 13268-1345-0 | Clavette | COLLET, valve spring | 2 | | | |
| | 8 | 13641-1381-0 | Couvercle | COVER, tappet case | 1 | | | |
| | 9 | 13641-1382-0 | Joint | PACKING | 2 | | | |
| | 10 | 01202-50625 | Boulon | BOLT | 2 | | | |

# 3. FILTRE A AIR
# AIR CLEANER GROUP

REF. No. ☑ 13644-4401-2
• Papillon de starter est modifie. (voir la page 12)
• Changed the choke valve. (shown page 12)

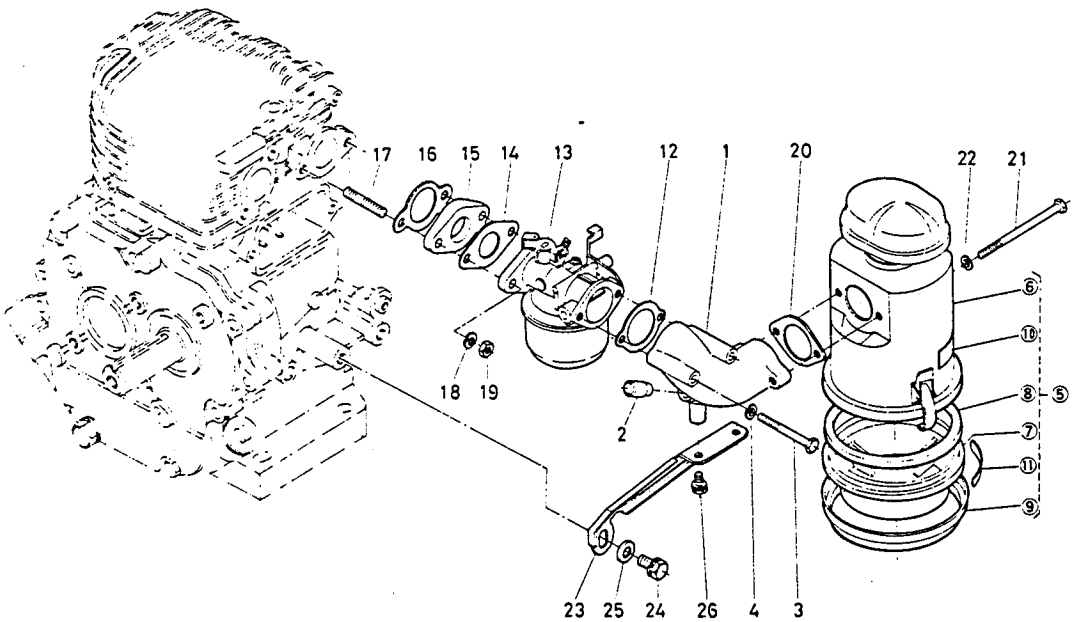


| S | REF. No. | CODE No. | DESCRIPTION FRANÇAIS | DESCRIPTION ENGLISH | UNITÉ UNIT | ÉCHANGEABILITÉ INTERCHANGEABILITY EC IC No. No. | NUMÉRO DE SÉRIE SERIAL No. | REMARQUES REMARKS |
|---|---|---|---|---|---|---|---|---|
| | 1 | 13644-1161-0 | Pipe | ELBOW, air cleaner | 1 | | | |
| | 2 | 13242-0555-0 | Raccord | JOINT, breather pipe | 1 | | | |
| | 3 | 01050-50650 | Boulon | BOLT | 2 | | | |
| | 4 | 04512-50060 | Rondelle grower | WASHER, spring | 2 | | | |
| | 5 | 13644-1101-0 | Filtre à air complet | ASSY CLEANER, air | 1 | | | ⑥~⑪ FRANCE |
| | | 13825-1101-0 | | | | | | UNITED, KINGDOM |
| | 6 | 13644-1120-0 | Corps filtre à air | COMP. CASE | 1 | | | |
| | 7 | 13301-1124-0 | Cuve | OIL PAN | 1 | | | |
| | 8 | 13301-1137-0 | Joint caoutchouc | PACKING | 1 | | | |
| | 9 | 13301-1126-0 | Collerette de cuve | RING, oil pan | 1 | | | |
| | 10 | 13000-1131-0 | Marque | MARK, air cleaner | 1 | | | FRANCE |
| | | 13825-1131-0 | | | | | | UNITED, KINGDOM |
| | 11 | 13000-1132-0 | Marque | MARK, oil gauge | 1 | | | FRANCE |
| | 12 | 13241-1165-0 | Joint | PACKING, air cleaner | 1 | | | |
| ☐ | 13 | 13644-4401-0 | Carburateur complet | ASSY CARBURETTOR | 1 | | ~11310 | |
| | | 13644-4401-2 | | | | | 10001~ | C |
| | 14 | 13641-4611-0 | Joint | PACKING, carburettor | 1 | | | |
| | 15 | 13641-4615-0 | Bride | FLANGE, carburettor | 1 | | | |
| | 16 | 13641-4616-0 | Joint | PACKING, carburettor flange | 1 | | | |
| | 17 | 01518-50630 | Goujon | STUD | 2 | | | |
| | 18 | 04512-50060 | Rondelle grower | WASHER, spring | 2 | | | |
| | 19 | 02014-50060 | Ecrou | NUT | 2 | | | |
| | 20 | 13223-1165-0 | Joint | PACKING, air cleaner | 1 | | | |
| | 21 | 01050-50685 | Boulon | BOLT | 2 | | | |
| | 22 | 04512-50060 | Rondelle grower | WASHER, spring | 2 | | | |
| | 23 | 13644-1158-0 | Support de filtre à air | STAY, air cleaner | 1 | | | |
| | 24 | 01120-50816 | Boulon | BOLT | 1 | | | |
| | 25 | 04013-50080 | Rondelle | WASHER, plain | 1 | | | |
| | 26 | 01202-50612 | Boulon | BOLT | 2 | | | |

# 4. SILENCIEUX
# MUFFLER GROUP

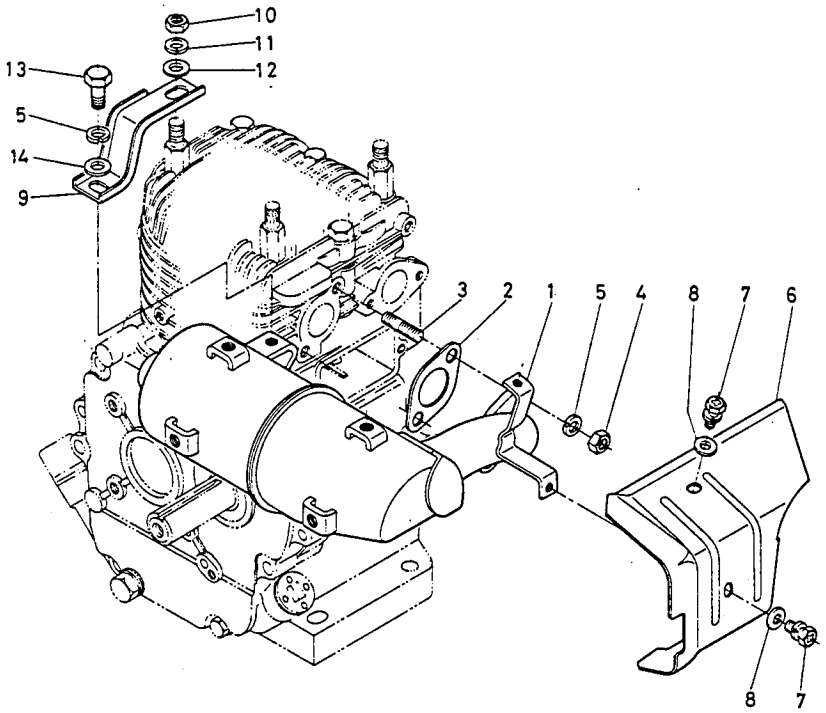


REF. No. 1 13644-1211-2

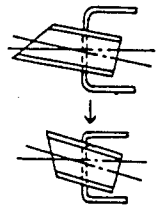

REF. No. 6 13644-1247-1

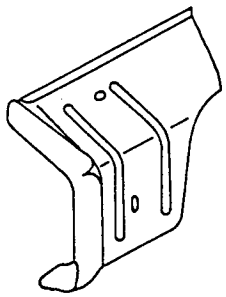

| S | REF. No. | CODE No. | DESCRIPTION FRANÇAIS | DESCRIPTION ENGLISH | UNITÉ UNIT | ÉCHANGEABILITÉ INTERCHANGEABILITY EC IC No. No. | NUMÉRO DE SÉRIE SERIAL No. | REMARQUES REMARKS |
|---|---|---|---|---|---|---|---|---|
| × | 1 | 13644-1211-0 | Silencieux | MUFFLER | 1 | | ~10311 | |
| | | 13644-1211-2 | | | | | 10001~ | B |
| | 2 | 13281-1223-0 | Joint | PACKING | 1 | | | |
| | 3 | 13641-9152-0 | Goujon | STUD | 2 | | | |
| | 4 | 02114-50080 | Ecrou | NUT | 2 | | | |
| | 5 | 04512-50080 | Rondelle grower | WASHER, spring | 3 | | | |
| □ | 6 | 13644-1247-0 | Tôle de protection | PLATE, heat resting | 1 | | ~10311 | |
| | | 13644-1247-2 | | | | | 10001~ | B |
| | 7 | 01202-50610 | Boulon | BOLT | 2 | | | |
| | 8 | 04013-50060 | Rondelle | WASHER, plain | 2 | | | |
| | 9 | 13644-1251-0 | Support | STAY, muffler | 1 | | | |
| | 10 | 02118-50100 | Ecrou | NUT | 1 | | | |
| | 11 | 04512-50100 | Rondelle grower | WASHER, spring | 1 | | | |
| | 12 | 04011-50100 | Rondelle | WASHER, plain | 1 | | | |
| | 13 | 01150-50812 | Boulon | BOLT | 1 | | | |
| | 14 | 04013-50080 | Rondelle | WASHER, plain | 1 | | | |

# 5. ARBRE A CAME
# CAMSHAFT GROUP

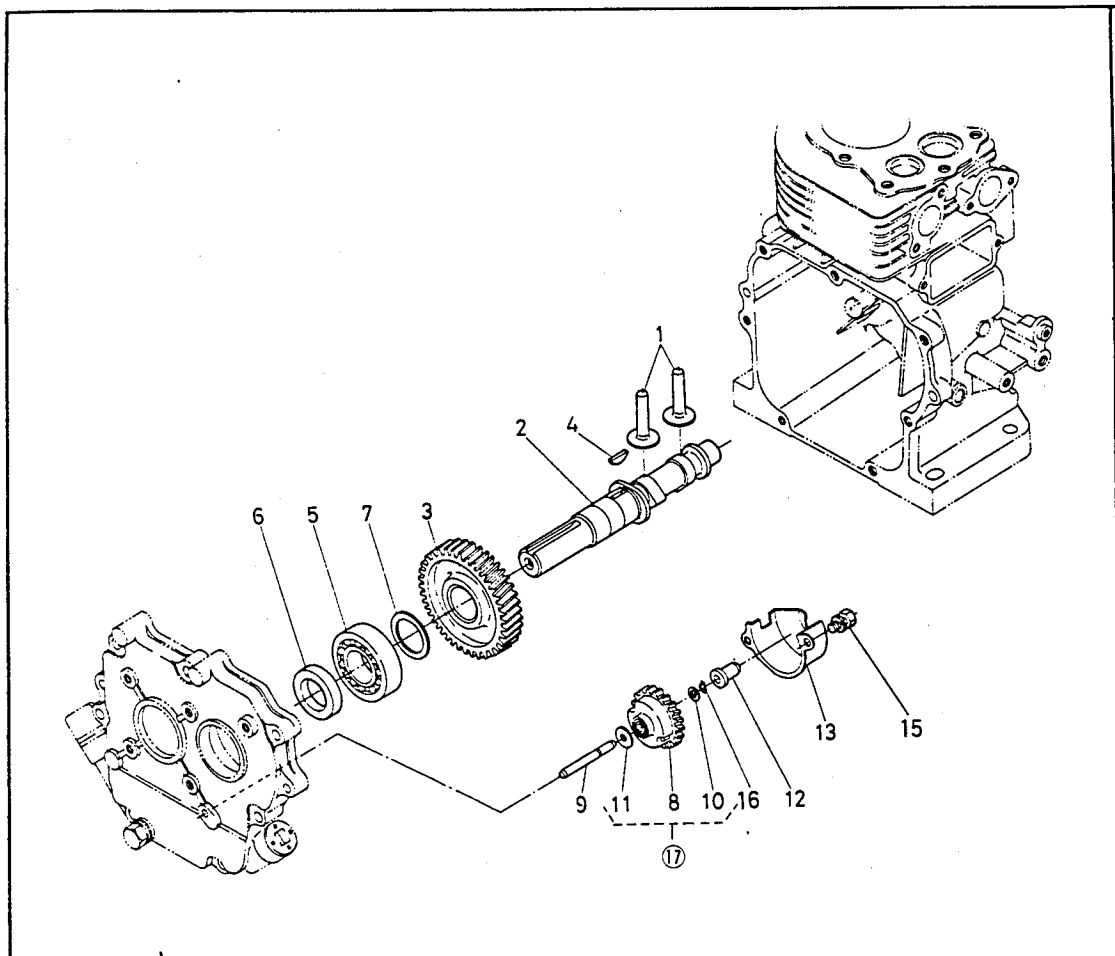


REF. No. 3 13641-1651-6

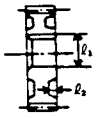

$\ell_1$ : 32.2 → 31.8mm
$\ell_2$ : 6 → 5.57mm

REF. No. 4 13641-9523-1

$\ell$ : 6.5→6.1mm

REF. No. 23 13641-5535-4

$\ell$ : 26 → 29mm

REF. No. 13 04512-50060
14 01050-50610

| S | REF. No. | CODE No. | DESCRIPTION FRANÇAIS | DESCRIPTION ENGLISH | UNITÉ UNIT | ÉCHANGEABILITÉ INTERCHANGEABILITY EC IC | No. No. | NUMÉRO DE SÉRIE SERIAL No. | REMARQUES REMARKS |
|---|---|---|---|---|---|---|---|---|---|
| | 1 | 13641-1555-0 | Poussoir | TAPPET | 2 | | | | |
| | 2 | 13641-1615-0 | Arbre à came | CAMSHAFT | 1 | | | | |
| | 3 | 13641-1651-0 | Pignon | GEAR, camshaft | 1 | | | | |
| □ | 4 | 05811-00416 | Clavette | KEY, woodruff | 1 | | | ~10060 | |
| | | 13641-9523-0 | | | | | | 10061~ | A |
| | 5 | 08101-06206 | Roulement à billes(6206) | BEARING, ball(6206) | 1 | | | | |
| | 6 | 13274-1664-0 | Baque joint | SEAL, oil | 1 | | | | |
| | 7 | 13641-2368-0 | Rondelle de règlage 20 | SHIM 20 | 1 | | | 10061~ | |
| | | 13641-2362-0 | Rondelle de règlage 30 | SHIM 30 | | | | | |
| | | 13641-2363-0 | Rondelle de règlage 40 | SHIM 40 | | | | | |
| | | 13641-2365-0 | Rondelle de règlage 50 | SHIM 50 | | | | | |
| | | 13641-1655-0 | Rondelle de règlage 25 | SHIM 25 | | | | | |
| | | 13641-1656-0 | Rondelle de règlage 35 | SHIM 35 | | | | | |
| | | 13641-2367-0 | Rondelle de règlage | SHIM crankshaft | 1 | | | 10061~11810 | |
| | | 13641-2369-0 | | | | | | | |
| | | 13641-2372-0 | | | | | | | |
| | 8 | 13641-5529-0 | Pignon complete | ASSY GEAR, governor | 1 | | | | |
| □ | 9 | 13641-5531-0 | Arbre | SHAFT, governor | 1 | | | ~12700 | |
| | | 13641-5531-3 | | | | | | 10001~ | B |
| | 10 | 13641-5533-0 | Rondelle 1 | WASHER 1 | 1 | | | ~12560 | FRANCE |
| | | | | | | | | ~12600 | UNITED, KINGDOM |
| | | Commander par REFNo.3* Order by REFNo.3* | | | | | | | 13641-5533-2 |
| | 11 | 13641-5534-0 | Rondelle 2 | WASHER 2 | 1 | | | ~12560 | FRANCE |
| | | | | | | | | ~12600 | UNITED, KINGDOM |
| | | Commander par REFNo.3* Order by REFNo.3* | | | | | | | 13641-5534-2 |
| | 12 | 13641-5545-0 | Butèe | SLEEVE, governor | 1 | | | | |
| | 13 | 13641-5535-0 | Carter de pignon | COVER, governor gear | 1 | | | ~11310 | |
| | | 13641-5535-4 | | | | | | 10001~ | |
| □ | 14 | 04512-50060 | Rondelle grower | WASHER, spring | 2 | | | ~10210 | |
| □ | 15 | 01050-50610 | Boulon | BOLT | 2 | | | ~10210 | |
| | | 01202-50610 | | | | | | 10001~ | C |
| | 16 | 13641-5536-0 | Arreteir | STOPPER | 1 | | | ~12700 | |
| | | 13641-5536-3 | | | | | | 100001~ | B |
| | 17 | 13641-5520-0 | Base de pignon complete | ASSY BASE, governor gear | 1 | | | 100001~ | A 8, 10, 11 |
| | | | | | | | | | |

# 6. VILEBREQUIN CRANKSHAFT GROUP

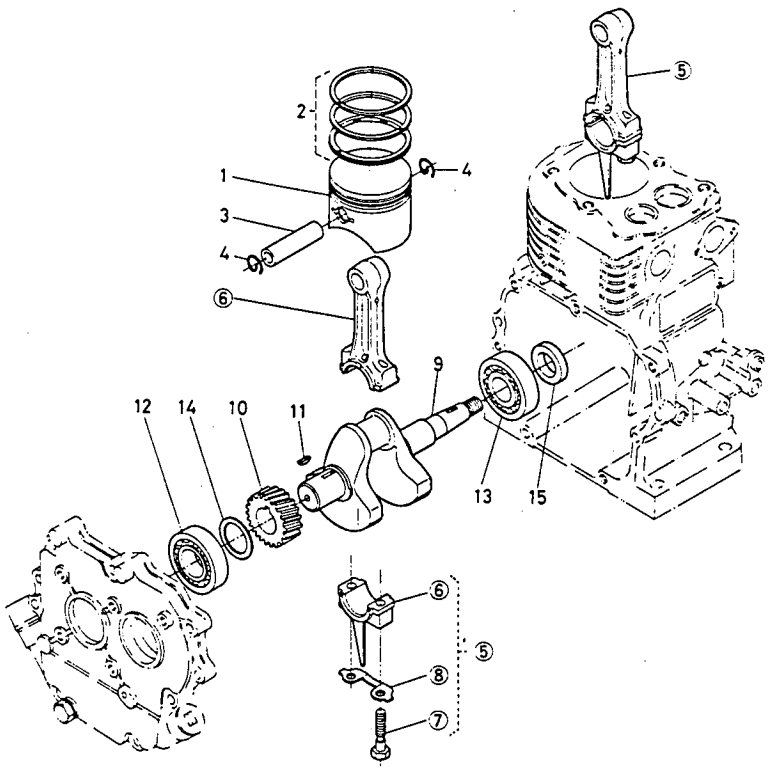


REF. No. 13641-2411-5

ℓ : 32.2 → 31.8mm

REF. No. 13641-9523-1

ℓ : 6.5→6.1mm

| S | REF. No. | CODE No. | DESCRIPTION FRANÇAIS | DESCRIPTION ENGLISH | UNITÉ UNIT | ÉCHANGEABILITÉ INTERCHANGEABILITY EC IC No. No. | NUMÉRO DE SÉRIE SERIAL No. | REMARQUES REMARKS |
|---|---|---|---|---|---|---|---|---|
| | 1 | 13641-2111-0 | Piston | PISTON | 1 | | | |
| | 2 | 13641-2105-0 | Jeu de segments | ASSY PISTON RING | 1 | | | |
| | 3 | 13641-2131-0 | Axe de piston | PISTON PIN | 1 | | | |
| | 4 | 13641-2133-0 | Circlip | CIR-CLIP, internal | 2 | | | |
| | 5 | 13641-2201-0 | Bielle complete | ASSY CONNECTING ROD | 1 | | | ⑥~⑧ |
| | 6 | Commander par REF. No.⑥ Order by REF. No.⑥ | | | | 1 ~ | | (13641-2211-0) |
| | 7 | 13641-2214-0 | Boulon | BOLT, connecting rod | 2 | | | |
| | 8 | 13641-2219-0 | Arrêtoir | WASHER | 1 | | | |
| | 9 | 13641-2311-0 | Vilebrequin | CRANKSHAFT | 1 | | | |
| □ | 10 | 13641-2411-0 | Pignon | GEAR, crankshaft | 1 | | ~10060 | |
| | | 13641-2411-5 | | | | | 10061~ | C |
| □ | 11 | 05811-00416 | Clavette | KEY, woodruff | 1 | | ~10060 | |
| | | 13641-9523-0 | | | | | 10061~ | A |
| | 12 | 08101-06206 | Roulement à billes(6206) | BEARING, ball(6206) | 1 | | | |
| | 13 | 08101-06305 | Roulement à billes(6206) | BEARING, ball(6206) | 1 | | | |
| | 14 | 13641-2368-0 | Rondelle de règlage 20 | SHIM 20 | 1 | | | |
| | | 13641-2362-0 | Rondelle de règlage 30 | SHIM 30 | 1 | | 10061~ | |
| | | 13641-2363-0 | Rondelle de règlage 40 | SHIM 40 | 1 | | | |
| | | 13641-2365-0 | Rondelle de règlage 50 | SHIM 50 | 1 | | | |
| | | 13641-1655-0 | Rondelle de règlage 25 | SHIM 25 | 1 | | | |
| | | 13641-1656-0 | Rondelle de règlage 35 | SHIM 35 | 1 | | | |
| | | 13641-2367-0 | Rondelle de règlage | SHIM crankshaft | 1 | | 10061~11810 | |
| | | 13641-2369-0 | | | | | | |
| | | 13641-2372-0 | | | | | | |
| | 15 | 09500-00023 | Baque joint | SEAL, oil | 1 | | | |

# 7. FILTRE ET ROBINET ESSENCE
# FUEL FILTER GROUP

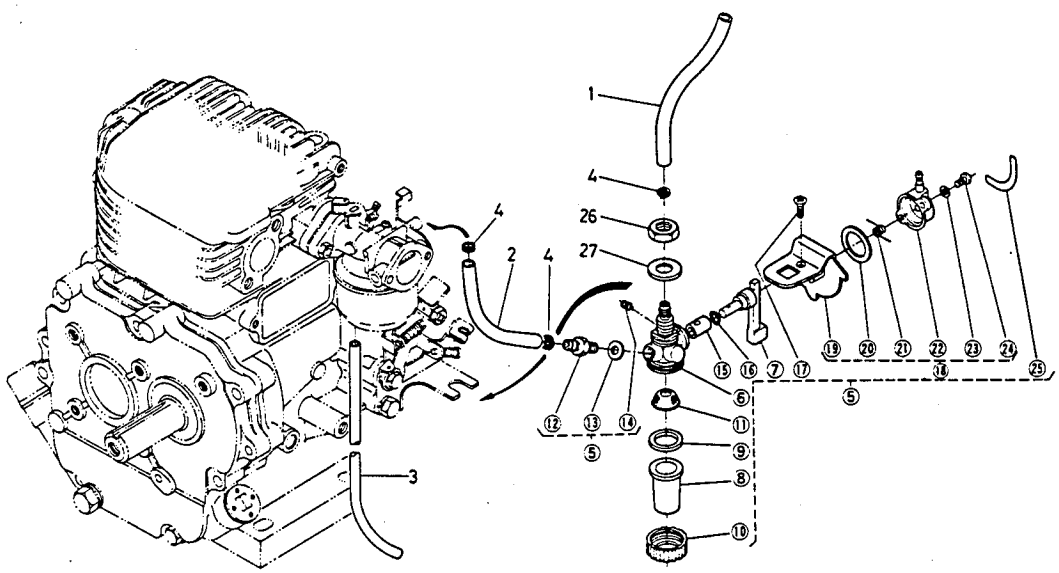


REF. No. ③ 13621-4236-1
- Diamètre interieur
- Inner diameter
  $\phi 10.3 \rightarrow \phi 10.8$mm

REF. No. ⑲ 13641-4380-2
- Matière de la prise de courant
- Material of the terminal
  ZDC2 →BSBM

| S | REF. No. | CODE No. | DESCRIPTION FRANÇAIS | DESCRIPTION ENGLISH | UNITÉ UNIT | ÉCHANGEABILITÉ INTERCHANGEABILITY EC IC | No. No. | NUMÉRO DE SÉRIE SERIAL No. | REMARQUES REMARKS |
|---|---|---|---|---|---|---|---|---|---|
| | 1 | 13644-4211-0 | Tuyau d'arrivée | PIPE, fuel | 1 | | | | |
| | 2 | 13644-4212-0 | Tuyau d'arrivée | PIPE, fuel | 1 | | | | |
| | 3 | 13644-4251-0 | Tuyau | PIPE | 1 | | | | |
| | 4 | 13268-4236-0 | Collier | CLIP, fuel pipe | 3 | | | ~11310 | C |
| | | 13621-4236-0 | | | | | | 10001~ | |
| □ | 5 | 13641-4301-0 | Filtre et rabinet essence complet | ASSY FILTER, fuel | 1 | | | ~10060 | ⑥~㉔ |
| □ | | 13644-4301-1 | | | | | | 10061~11310 | ⑥~㉕ FRANCE |
| | | 13644-4301-3 | | | | | | 10061~ | |
| | | 13645-4301-2 | | | | | | | ⑥~㉔ UNITED. KINGDOM |
| | 6 | Commander par REF. No. ③ Order by REF. No. ⑤ | | | | | | | (13641-4311-0) |
| | 7 | 13641-4312-0 | Levier | HANDLE, filter | 1 | | | | |
| | 8 | 13641-4313-0 | Cuve | POT, filter | 1 | | | | |
| | 9 | 13641-4314-0 | Joint | PACKING | 1 | | | | |
| | 10 | 13641-4315-0 | Collerette de cuve | RING, retainer | 1 | | | | |
| | 11 | 13641-4316-0 | Tamis | ELEMENT, filter | 1 | | | | |
| | 12 | 13645-4361-0 | Raccord de | JoINT, pipe | 1 | | | | |
| | 13 | 13641-4363-0 | Joint | PACKING | 1 | | | | |
| | 14 | 13641-9137-0 | Boulon | BOLT, set | 1 | | | | |
| | 15 | 13641-4324-0 | Joint | SEAL, handle | 1 | | | | |
| | 16 | 13641-9675-0 | Joint caoutchouc | O RING | 1 | | | | |
| | 17 | 03012-50306 | Vis | SCREW | 1 | | | | |
| | 18 | 13641-4380-0 | Interrupteur complet | ASSY SWITCH | 1 | | | ~11310 | C ⑱~㉔ |
| | | 13641-4380-2 | | | | | | 10001~ | |
| | 19 | 13641-4390-0 | Support de Interrupteur complet | COMP. SUPPORT, switch | 1 | | | | |
| | 20 | 13641-4382-0 | Joint | PACKING, switch cover | 1 | | | | |
| | 21 | 13641-4383-0 | Levier de Interrupteur | LEVER, switch | 1 | | | | FRANCE |
| | 22 | 13641-4381-0 | Couvercle de Interrupteur | COVER, switch | 1 | | | | |
| | 23 | 04512-50040 | Rondelle grower | WASHER, spring | 2 | | | | |
| | 24 | 03054-50408 | Vis | SCREW | 2 | | | | |
| | 25 | 13644-8746-0 | Marque | LABEL, fuel filter | 1 | | | | |
| | ㉖ | 02074-50120 | Ecrou | NUT | 1 | | | | |
| | | 02172-50120 | | | | | | | |
| | ㉗ | 04013-50120 | Rondelle | WASHER, plain | 1 | | | | |

# 8. REGULATEUR LEVIER
# GOVERNOR LEVER GROUP

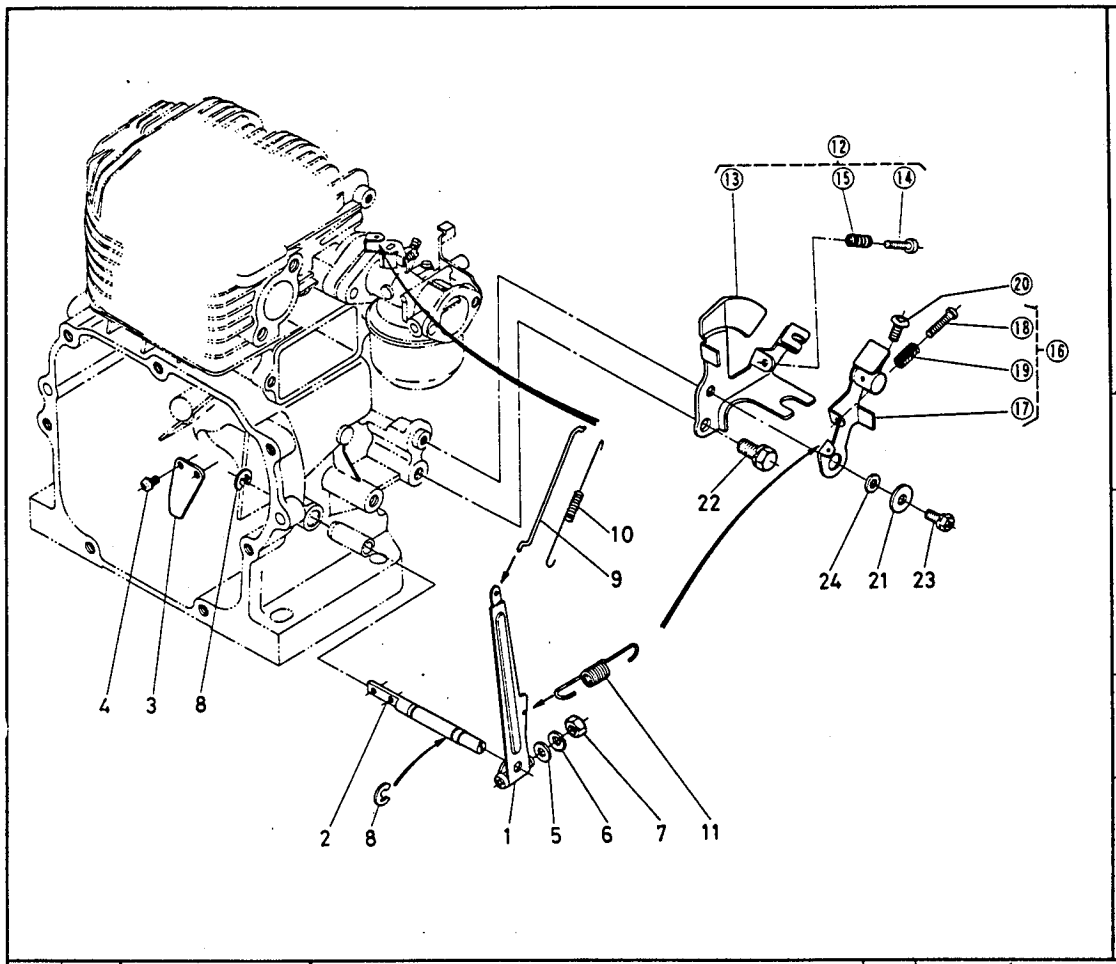


REF. No. ② 13641-5614-3

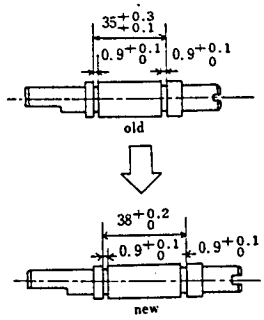


REF. No. ⑬ 13641-5711-5

- Renforcé
- Reinforced

REF. No. ⑮ 13316-9341-1

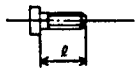


ℓ : 25→20mm

REF. No. ⑱ 13581-9341-1

ℓ : 20 → 25mm

REF. No. ⑲ 13641-5686-1

- Longueur
- Length

15→19 mm

| S | REF. No. | CODE No. | DESCRIPTION FRANÇAIS | DESCRIPTION ENGLISH | UNITÉ UNIT | ÉCHANGEABILITÉ INTERCHANGEABILITY EC IC No. | NUMÉRO DE SÉRIE SERIAL No. | REMARQUES REMARKS |
|---|---|---|---|---|---|---|---|---|
| | 1 | 13644-5611-0 | Levier régulateur | LEVER, governor | 1 | | | |
| | 2 | 13641-5614-0 | Arbre | SHAFT, governor lever | 1 | | | |
| | | 13641-5614-3 | | | | | | |
| | 3 | 13641-5632-0 | Butée | ROCKER, governor | 1 | | | |
| | 4 | 03024-50408 | Vis | SCREW | 2 | | | |
| | 5 | 04012-50060 | Rondelle | WASHER, plain | 1 | | | |
| | 6 | 04512-50060 | Rondelle grower | WASHER, spring | 1 | | 10311~ | A |
| | 7 | 02014-50060 | Ecrou | NUT | 1 | | | |
| | ⑧ | 04613-00070 (04613-50070) | Circlip | CIR-CLIP, external | 2 | | | |
| | 9 | 13641-5635-0 | Tige | ROD, governor connecting | 1 | | | |
| | 10 | 13641-5639-0 | Ressort | SPRING | 1 | | | |
| | 11 | 13641-5641-0 | Ressort | SPRING | 1 | | | |
| □ | 12 | 13644-5701-0 | Support de réglateur complet | ASSY PLATE, speed control | 1 | | ~12060 | ⑬~⑮ |
| | | 13644-5701-4 | | | | | 10001~ | B⑬~⑮ |
| □ | 13 | 13641-5711-0 | Support de réglateur | PLATE, speed control | 1 | | ~12060 | |
| | | 13641-5711-5 | | | | | 10001~ | B·Shown by prior Fig. |
| | 14 | 13581-9341-0 | Vis | SCREW | 1 | | | |
| | 15 | 13641-5686-0 | Ressort | SPRING | 1 | | | |
| | 16 | 13644-5704-0 | Levier de régulateur complet | ASSY LEVER, speed control | 1 | | ~10310 | ⑰~⑲ |
| | | 13644-5704-4 | | | | | 10001~11810 | C⑰~⑲ |
| | | 13643-5704-2 | | | | | 10001~ | C⑰~⑲ |
| | 17 | 13644-5715-0 | Levier de régulateur | LEVER, speed control | 1 | | | |
| × | 18 | 13581-9341-0 | Vis | SCREW | 1 | | ~10310 | |
| | | 13316-9341-0 | | | | | 10001~ | C |
| | | 13581-9341-0 | | | | | 10001~ | C |
| × | 19 | 13301-5686-0 | Ressort | SPRING | 1 | | ~10060 | |
| | | 13641-5686-0 | | | | | 10001~ | C |
| | 20 | 03054-50512 | Vis | SCREW, pan head | 1 | | | |
| | 21 | 13641-9401-0 | Rondelle | WASHER, plain | 1 | | | |
| | 22 | 01120-50818 | Boulon | BOLT | 1 | | | |
| | 23 | 01202-50618 | Boulon | BOLT | 1 | | | |
| | 24 | 13644-5724-0 | Entretoise | COLLAR | 1 | | | |

# 9. LANCEUR
# RECOIL STARTER GROUP

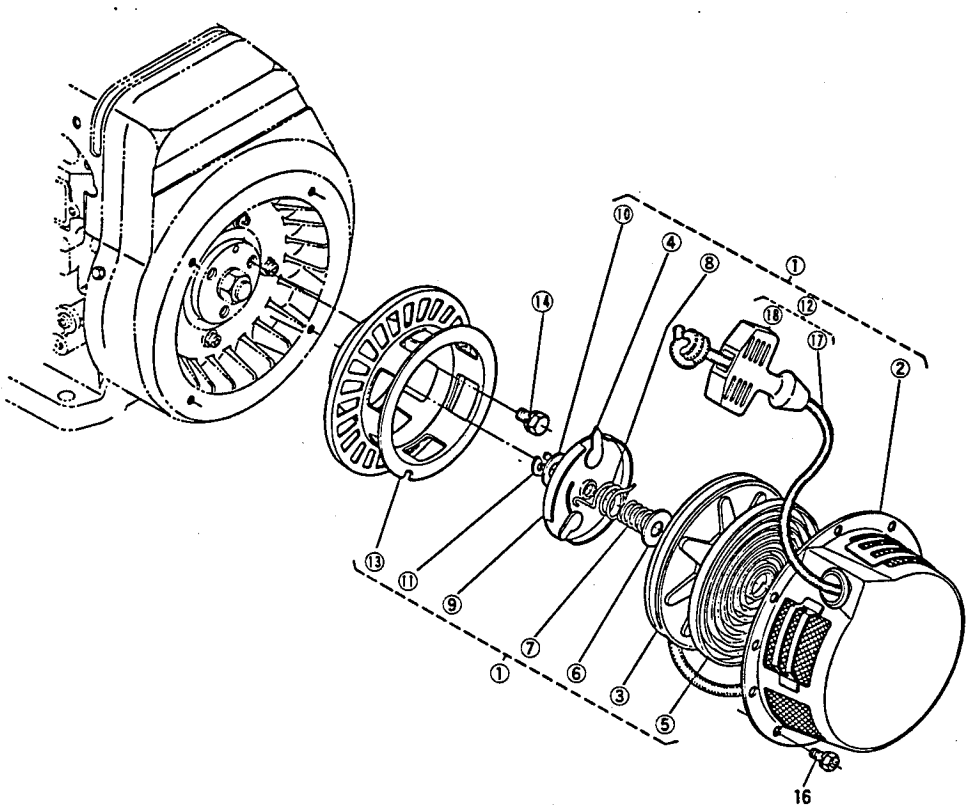


REF. No. ⑬ 13641-6174-2

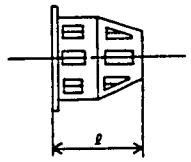


ℓ : 78 → 77mm

REF. No. ⑭ 01150-50814
REF. No. ⑮ 04512-50080

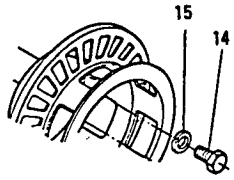


| S | REF. No. | CODE No. | DESCRIPTION FRANÇAIS | DESCRIPTION ENGLISH | UNITÉ UNIT | ÉCHANGEABILITÉ INTERCHANGEABILITY EC IC No. | NUMÉRO DE SÉRIE SERIAL No. | REMARQUES REMARKS |
|---|---|---|---|---|---|---|---|---|
| □ | 1 | 13641-6101-0 | Lanceur complet | ASSY STARTER, recoil | 1 | | ~10810 | ②~⑬ |
| | | 13641-6101-3 | | | | | 10001~ | C②~⑬ |
| | 2 | 13641-6151-0 | Carter lanceur | CASE, recoil starter | 1 | | | |
| | 3 | 13641-6152-0 | Poulie | REEL | 1 | | | |
| | 4 | 13641-6153-0 | Cliquet | CLAW | 3 | | | |
| | 5 | 13641-6154-0 | Ressort spiral | SPRING, spiral | 1 | | | |
| | 6 | 13641-6157-0 | Rondelle | WASHER, thrust | 1 | | | |
| | 7 | 13641-6163-0 | Ressort | SPRING | 1 | | | |
| | 8 | 13257-6185-0 | Ressort | SPRING, return | 1 | | | |
| | 9 | 13641-6162-0 | Cage de cilquet | PLATE, pressure | 1 | | | |
| | 10 | 13641-6164-0 | Rondelle | WASHER, thrust | 1 | | | |
| | 11 | 13641-6156-0 | Circlip | CIR-CLIP, external | 1 | | | |
| | 12 | 13641-6109-0 | Corde | ROPE | 1 | | | |
| □ | 13 | 13641-6174-0 | Poulie | PULLEY, starter | 1 | | ~10810 | |
| | | 13641-6174-2 | | | | | 10001~ | C |
| □ | 14 | 01150-50814 | Boulon | BOLT | 3 | | ~11902 | |
| | | 01120-50814 | | | | | 10001~ | C |
| □ | 15 | 04512-50080 | Rondelle grower | WASHER, spring | 3 | | ~11902 | |
| | 16 | 01202-50610 | Boulon | BOLT | 4 | | | |
| | 17 | 13641-6165-0 | Corde | ROPE | 1 | | | |
| | 18 | 13641-6167-0 | Manette | HANDLE | 1 | | | |

# 10. VOLANT MAGNETIQUE
# MAGNETO GROUP

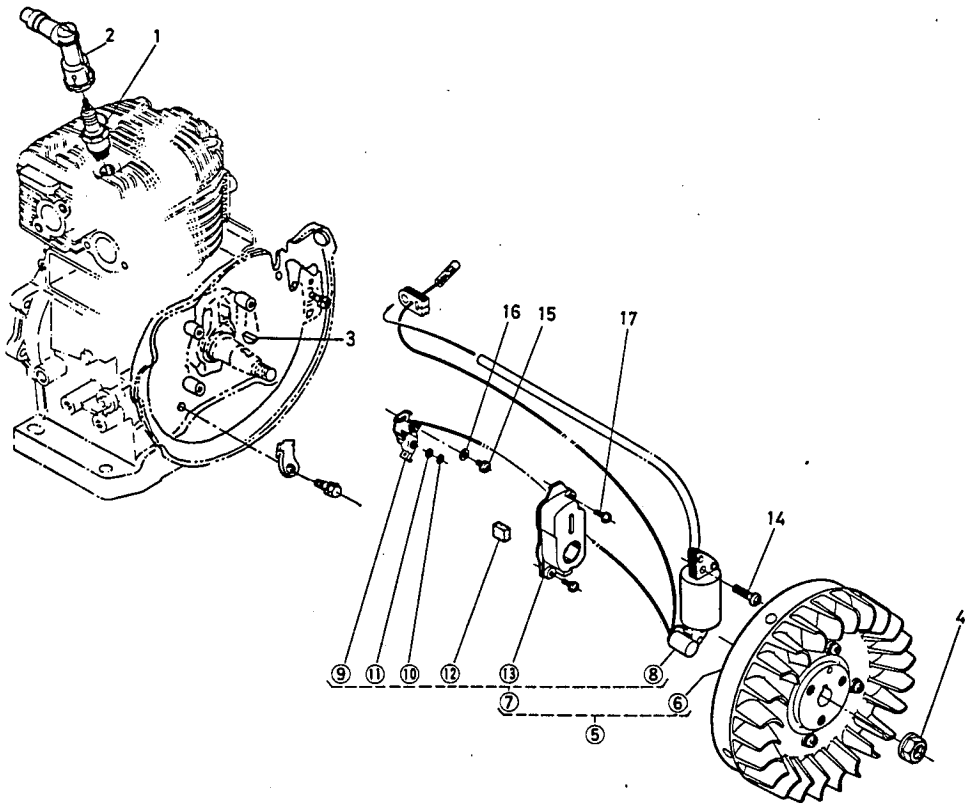


| S | REF. No. | CODE No. | DESCRIPTION FRANÇAIS | DESCRIPTION ENGLISH | UNITÉ UNIT | ÉCHANGEABILITÉ INTERCHANGEABILITY EC No. IC No. | NUMÉRO DE SÉRIE SERIAL No. | REMARQUES REMARKS |
|---|---|---|---|---|---|---|---|---|
| | 1 | 13641-6771-0 | Bougie | SPARK PLUG | 1 | | | |
| | 2 | 13644-6772-0 | Capsule de bougie | CAP, spark plug | 1 | | | |
| | 3 | 05811-00416 | Clavette | KEY, woodruff | 1 | | | |
| | 4 | 13641-9211-0 | Ecrou | NUT | 1 | | | |
| | 5 | 13644-6701-0 | Volant magnétique complet | ASSY MAGNETO | 1 | | | ⑥, ⑦FRANCE |
| | | 13825-6701-0 | | | | | | UNITED, KINGDOM |
| | 6 | 13644-6703-0 | Volant | COMP. ROTOR | 1 | | | |
| | 7 | 13644-6705-0 | Stater complet | COIL, ignition | 1 | | | ⑧~⑬FRANCE |
| | | 13825-6705-0 | | | | | | UNITED, KINGDOM |
| | 8 | 13644-6706-0 | Bobine allamage haute tension | COIL, ignition | 1 | | | FRANCE |
| | | 13825-6706-0 | | | | | | UNITED, KINGDOM |
| | 9 | 13641-6803-0 | Vis platinées | ASSY POINT | 1 | | | |
| | 10 | 13251-6829-0 | Circlip | CIR-CLIP, external | 1 | | | |
| | 11 | 13211-6844-0 | Rondelle | WASHER, thrust | 1 | | | |
| | 12 | 13251-6806-0 | Feutre | FELT, oil | 1 | | | |
| | 13 | 13641-6811-0 | Couvercle | COVER, breaker | 1 | | | |
| | 14 | 03004-50625 | Vis | SCREW | 4 | | | |
| | | 01202-50625 | | | | | | C |
| | 15 | 03024-50410 | Vis | SCREW | 1 | | | |
| | 16 | 04013-50040 | Rondelle | WASHER, plain | 1 | | | |
| | 17 | 03024-50412 | Vis | SCREW | 2 | | | |
| | 18 | 10244-4237-0 | Coillier pour câble | CLAMP, cord | 1 | | ~10810 | |

# 11. CARTER SPIRAL CASE GROUP

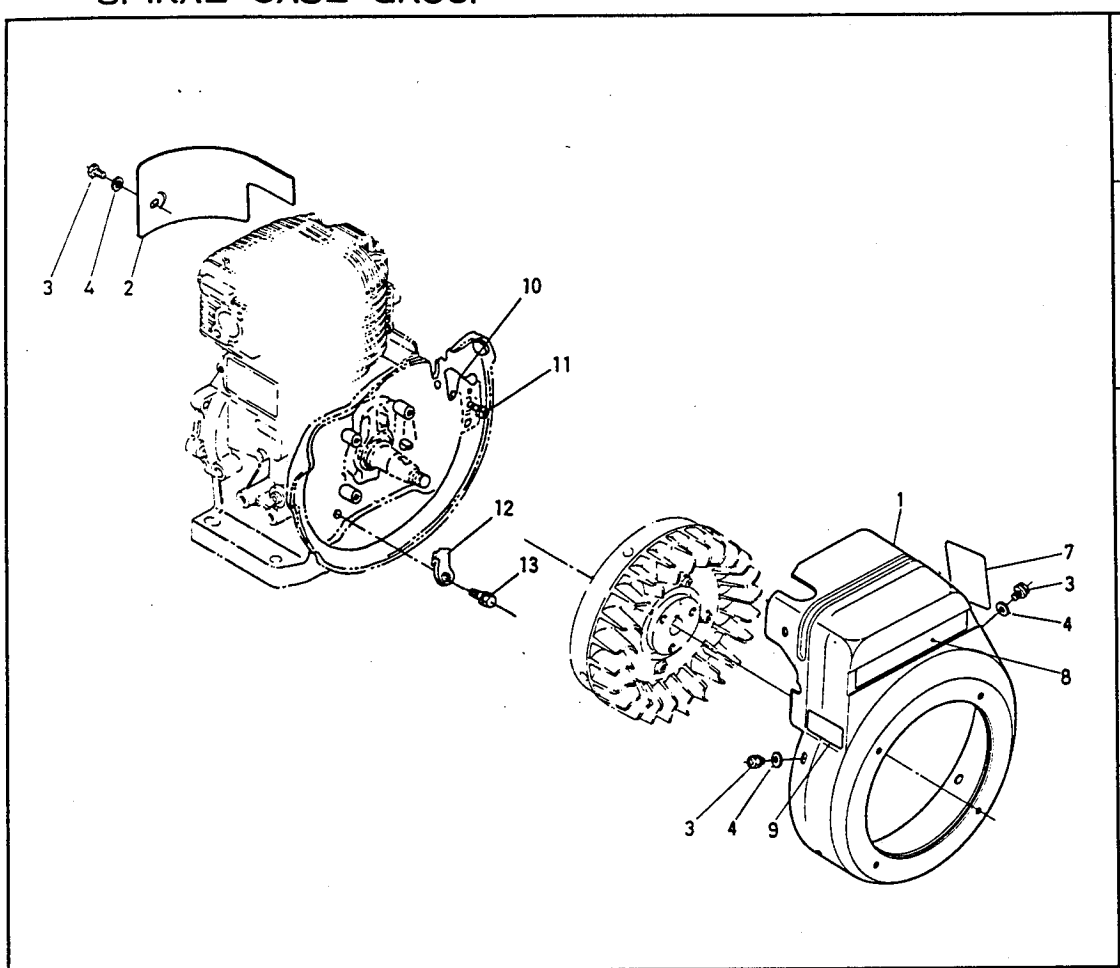


REF. No. 1 13641-7407-5

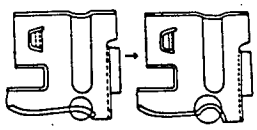

REF. No. 5 13641-7457-4

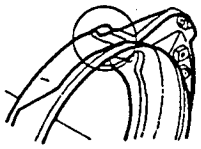

REF. No. 5 13641-7457-2
REF. No. 6 01120-50818

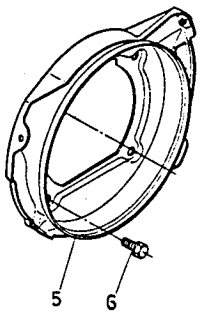


| S | REF. No. | CODE No. | DESCRIPTION FRANÇAIS | DESCRIPTION ENGLISH | UNITÉ UNIT | ÉCHANGEABILITÉ INTERCHANGEABILITY EC IC No. | NUMÉRO DE SÉRIE SERIAL No. | REMARQUES REMARKS |
|---|---|---|---|---|---|---|---|---|
| | 1 | 13641-7407-0 | Carter | COMP. CASE, spiral | 1 | | ~11310 | |
| | | 13641-7407-5 | | | | | 10001~ | B |
| | 2 | 13641-7449-0 | Tôle | COWLING, cylinder | 1 | | | |
| □ | 3 | 01222-50612 | Boulon | BOLT | 6 | | ~11810 | |
| | | 13641-7452-0 | | | | | 10001~ | |
| | 4 | 04013-50060 | Rondelle | WASHER | 6 | | ~11810 | |
| □ | 5 | 13641-7457-0 | Support | SUPPORT, spiral | 1 | ~ 4 | ~10310 | |
| | | 13645-7457-0 | | | | 1 ~ | 10001~12160 | C |
| | 6 | 01120-50818 | Boulon | BOLT | 4 | | ~12160 | |
| | 7 | 13644-8711-2 | Marque | NAME PLATE, engine | 1 | | | FRANCE |
| | | 13825-8711-0 | | | | | | UNITED, KINGDOM |
| | 8 | 13641-8716-0 | Marque | MARK, KUBOTA | 1 | | | |
| | 9 | 13644-8751-0 | Marque | LABEL, start | 1 | | | FRANCE |
| | 10 | 13641-6767-0 | Couvercle | COVER | 1 | 1 ~ | 12161~ | A |
| | 11 | 01202-50612 | Boulon | BOLT | 1 | | 12161~ | A |
| | 12 | 13643-6757-0 | Bride serrage | CLAMP, cord | 1 | | 12161~ | A |
| | 13 | 01202-50612 | Boulon | BOLT | 1 | | 12161~ | A |

# 12. CARBURATEUR
# CARBURETTOR GROUP

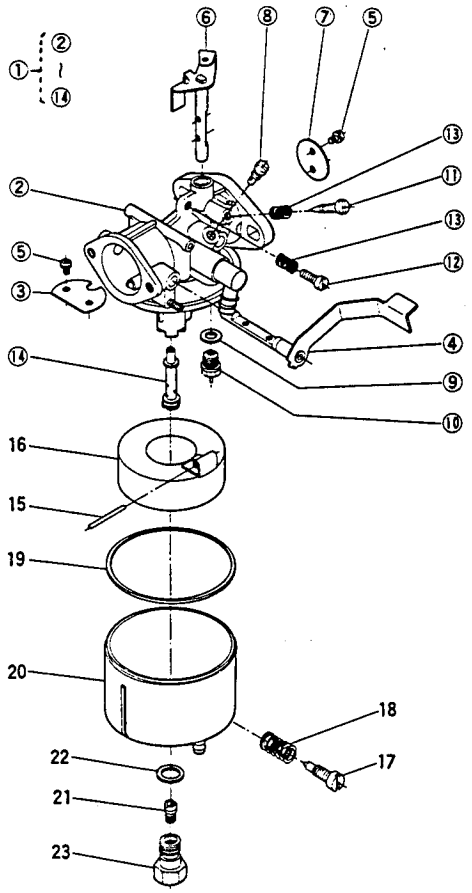


REF. No. ① 13644-44021
• Numéro de code pour service
• Adopted cord number for service

REF. No. ③ 13641-44532

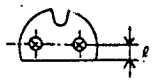


ℓ: 7 → 8.5mm

| S | REF. No. | CODE No. | DESCRIPTION FRANÇAIS | DESCRIPTION ENGLISH | UNITÉ UNIT | ÉCHANGEABILITÉ INTERCHANGEABILITY EC No. IC No. | NUMÉRO DE SÉRIE SERIAL No. | REMARQUES REMARKS |
|---|---|---|---|---|---|---|---|---|
| | 1 | 13644-4402-0 | Corps de carburateur complet | ASSY BODY, carburettor | 1 | | | A②~⑭ |
| | 2 | 13644-4410-0 | Corps de carburateur | BODY, carburettor | 1 | | | |
| □ | 3 | 13641-4453-0 | Papillon de starter | VALVE, choke | 1 | | ~11310 | |
| | | 13641-4453-2 | | | | | 10001~ | C |
| | 4 | 13644-4450-0 | Axe de starter complet | COMP. SHAFT, choke | 1 | | | |
| | 5 | 03024-50305 | Vis | SCREW | 4 | | | |
| | 6 | 13641-4430-0 | Axe de gaz complet | COMP. SHAFT, throttle | 1 | | | |
| | 7 | 13211-4432-0 | Papillon de gaz | VALVE, throttle | 1 | | | |
| | 8 | 13641-4418-0 | Gicleur | PILOT-JET | 1 | | | |
| | 9 | 13591-4485-0 | Joint | PACKING | 1 | | | |
| | 10 | 13641-4484-0 | Pointeau d'arrivée | VALVE, neeble | 1 | | | |
| | 11 | 13641-4422-0 | Vis de réglage | SCREW, pilot | 1 | | | |
| | 12 | 13641-4423-0 | Vis de butée | SCREW, idle | 1 | | | |
| | 13 | 13641-4421-0 | Ressort | SPRING | 2 | | | |
| | 14 | 13644-4412-0 | Diffuseur | NOZZLE, main | 1 | | | |
| | 15 | 13641-4478-0 | Axe | PIN, flort | 1 | | | |
| | 16 | 13641-4471-0 | Flotteru | ASSY FLOAT | 1 | | | |
| | 17 | 13591-4483-0 | Vis de vidange | SCREW, drain | 1 | | | |
| | 18 | 13591-4481-0 | Ressort | SPRING | 1 | | | |
| | 19 | 13641-4475-0 | Joint de cuve | PACKING, float chamber | 1 | | | |
| | 20 | 13641-4473-0 | Cuve | CHAMBER, float | 1 | | | |
| | 21 | 13644-4426-0 | Gicleur | JET, main | 1 | | | |
| | 22 | 13641-4428-0 | Joint | PACKING | 1 | | | |
| | 23 | 13641-4427-0 | Pointeau | HOLDER, main jet | 1 | | | |

# 13. BOITE DE VITESSES TRANSMISSION GROUP

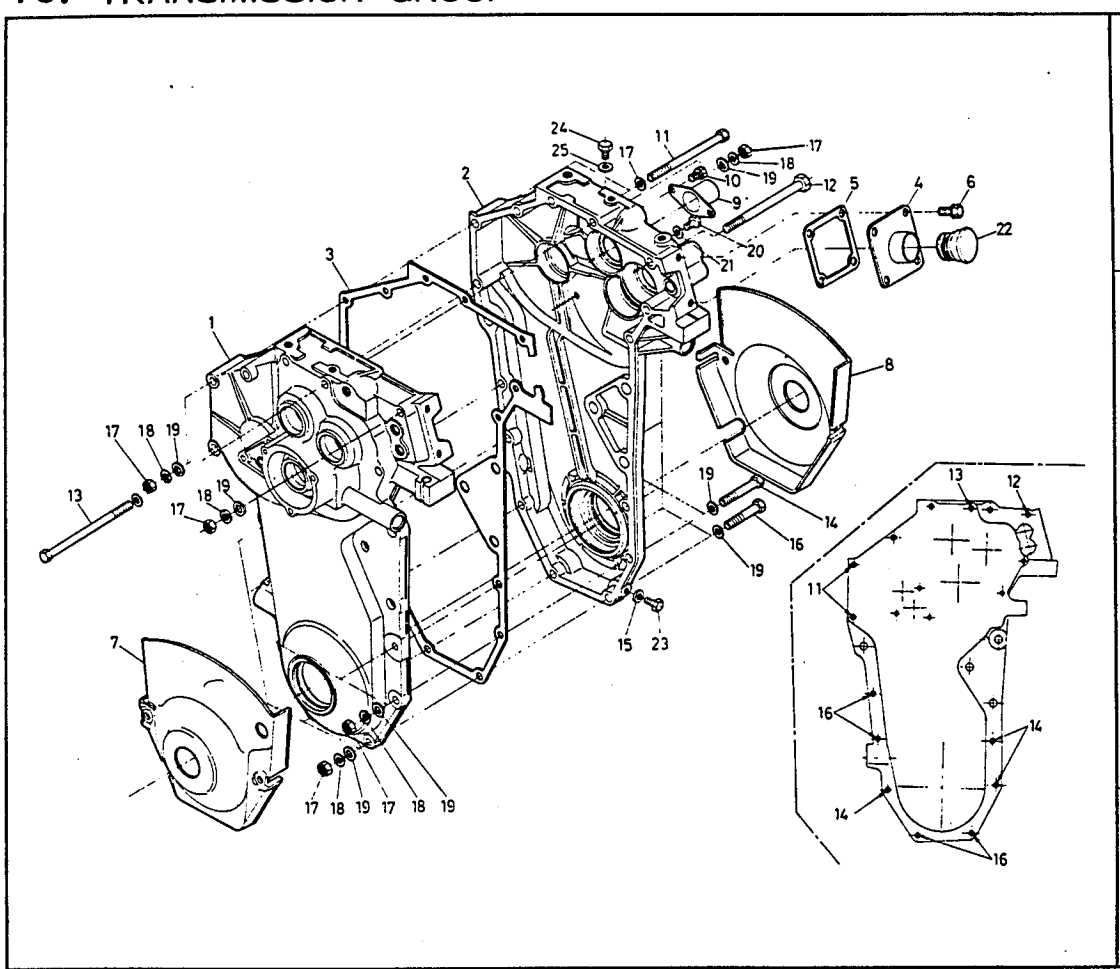


| S | REF. No. | CODE No. | DESCRIPTION FRANÇAIS | DESCRIPTION ENGLISH | UNITÉ UNIT | ÉCHANGEABILITÉ INTERCHANGEABILITY EC IC No. No. | NUMÉRO DE SÉRIE SERIAL No. | REMARQUES REMARKS |
|---|---|---|---|---|---|---|---|---|
| × | 1 | 62271-1111-0 | Carter transmission (G) | CASE, transmission LH | 1 | | ~10050 | |
| □ | | 62271-1111-4 | | | | | 10001~11300 | C |
| | | 62271-1111-7 | | | | | 11301~ | C |
| × | 2 | 62271-1112-0 | Carter transmission (D) | CASE, transmission RH | 1 | | ~10050 | |
| □ | | 62271-1112-4 | | | | | 10001~11300 | C |
| □ | | 62271-1112-7 | | | | | 11301~11800 | C |
| | | 62271-1112-8 | | | | | 11801~ | C |
| | 3 | 62271-1113-0 | Joint | PACKING | 1 | | | |
| | 4 | 62271-1114-0 | Couvercle | COMP. COVER, case rear | 1 | | | |
| | 5 | 62271-1117-0 | Joint | PACKING | 1 | | | |
| | 6 | 01120-50816 | Boulon | BOLT | 4 | | | |
| □ | 7 | 62271-1118-0 | Couvercle (G) | COVER, side LH | 1 | | ~11300 | |
| | | 62271-1118-4 | | | | | 10001~ | C |
| □ | 8 | 62271-1119-0 | Couvercle (D) | COVER, side RH | 1 | | ~11300 | |
| | | 62271-1119-4 | | | | | 10001~ | C |
| | 9 | 62271-1121-0 | Couvercle | COVER | 1 | | | |
| | 10 | 01202-50610 | Boulon | BOLT | 2 | | | |
| | 11 | 62271-1122-0 | Boulon | BOLT | 2 | | ~10050 | |
| | | | | | 1 | | 10001~ | C |
| | 12 | 62081-1117-0 | Boulon | BOLT | 1 | | | |
| | 13 | 62081-1118-0 | Boulon | BOLT | 1 | | ~10050 | |
| | | | | | 2 | | 10001~ | C |
| | 14 | 01150-50850 | Boulon | BOLT | 3 | | | |
| | 15 | 04717-00800 | Rondelle joint | WASHER, seal | 1 | | | |
| | 16 | 01150-50842 | Boulon | BOLT | 4 | | | |
| | 17 | 02114-50080 | Ecrou | NUT | 11 | | | |
| | 18 | 04512-50080 | Rondelle grower | WASHER, spring | 11 | | | |
| | 19 | 04013-50080 | Rondelle | WASHER, plain | 20 | | | |
| | 20 | 01050-50610 | Boulon | BOLT | 1 | | | |

# 13. BOITE DE VITESSES
# TRANSMISSION GROUP

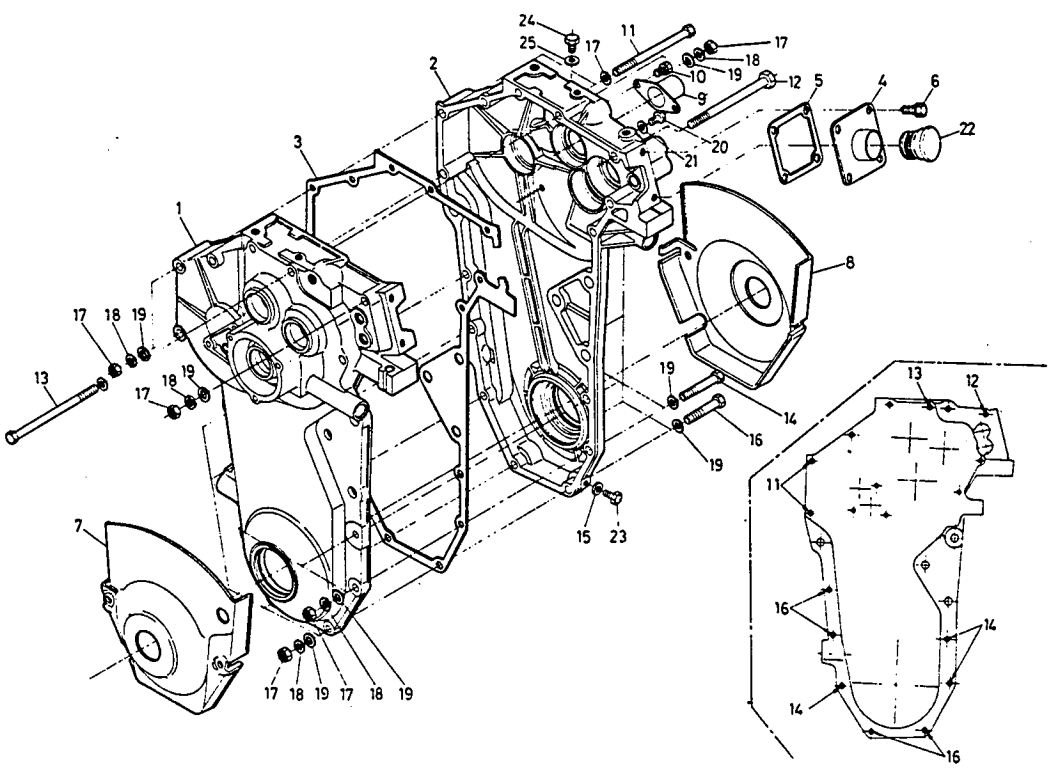


REF. No. ① 62271-11114
- Renforcé et changé en forme.
- Reinforced and changed in shape.

62271-11117

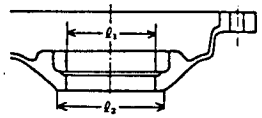


ℓ1 : ϕ62→ϕ68mm
ℓ2 : ϕ74→80mm

REF. No. ② 62271-11124
- Renforcé et changé enforme.
- Reinforced and changed in shape.

62271-11127

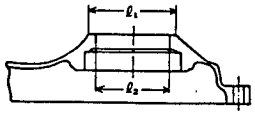


ℓ1 : ϕ74→ϕ80mm
ℓ2 : ϕ62→ϕ68mm

62271-11128

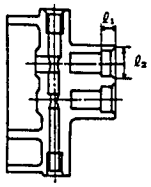


ℓ1 : 5→3 mm
ℓ2 : 19→18mm

REF. No. ⑦ 62271-11184
REF. No. ⑧ 62271-11194

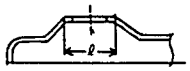


ℓ : ϕ76→ϕ82mm

| S | REF. No. | CODE No. | DESCRIPTION FRANÇAIS | DESCRIPTION ENGLISH | UNITÉ UNIT | ÉCHANGEABILITÉ INTERCHANGEABILITY E C No. I C No. | NUMÉRO DE SÉRIE SERIAL No. | REMARQUES REMARKS |
|---|---|---|---|---|---|---|---|---|
| | 21 | 04717-00600 | Roudelle joint | WASHER seal | 1 | | | |
| | 22 | 62081-1122-0 | Bouchon | CAP, oil filter | 1 | | | |
| | 23 | 01150-50812 | Boulon | BOLT | 1 | | | |
| | 24 | 62271-1123-0 | Boulon | BOLT | 1 | | 10051~ | A |
| | 25 | 04724-00100 | Joint | PACKING | 1 | | 10051~ | A |

# 14. POIGNEE DEPORT
# MAIN CLUTCH GROUP

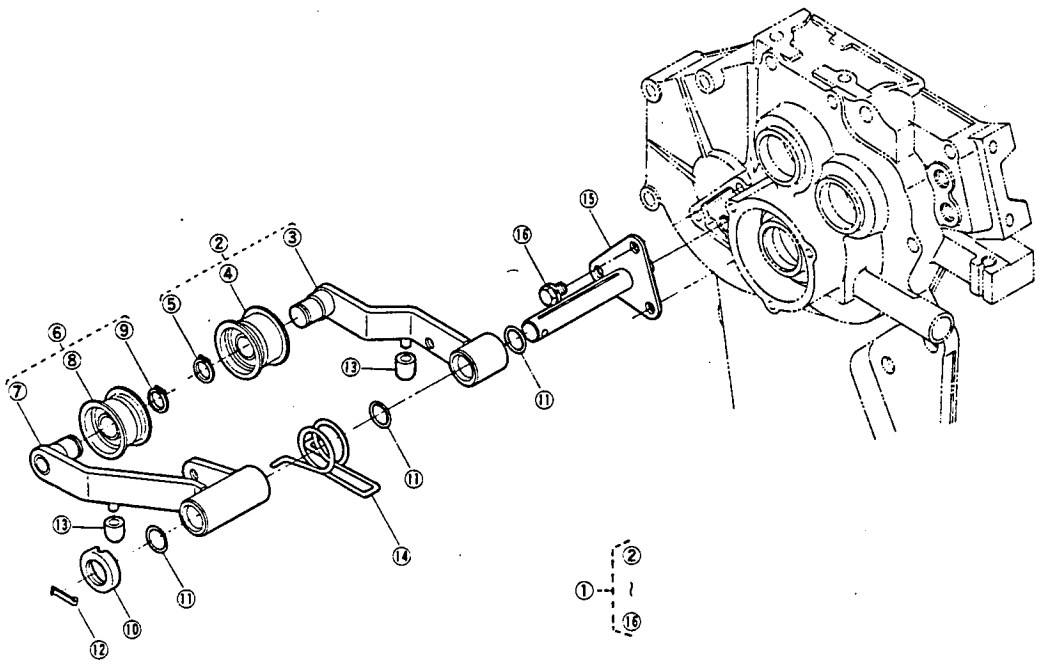


REF. No. ⑬ 62271-1331-3

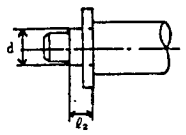


d : φ10 → φ14mm
ℓ : 7mm

| S | REF. No. | CODE No. | DESCRIPTION FRANÇAIS | DESCRIPTION ENGLISH | UNITÉ UNIT | ÉCHANGEABILITÉ INTERCHANGEABILITY EC IC No. | NUMÉRO DE SÉRIE SERIAL No. | REMARQUES REMARKS |
|---|---|---|---|---|---|---|---|---|
| | 1 | 62271-1301-0 | Tendeur courroie complet | ASSY PULLEY, tension | 1 | | | ②~⑯ |
| | 2 | 62271-1310-0 | Tendeur courroie (A) complet | ASSY PULLEY, tension | 1 | | | ②~⑤ |
| | 3 | 62271-1311-0 | Levier (A) | ARM 1, tension pulley | 1 | | | |
| | 4 | 62061-1310-0 | Galet | ASSY PULLEY, tension | 1 | | | |
| | ⑤ | 04612-00170 (04612-10170) | Circlip | CIR-CLIP, external | 1 | | | |
| | 6 | 62271-1320-0 | Tendeur courroie (B) complet | ASSY PULLEY, tension | 1 | | | ⑦~⑨ |
| | 7 | 62271-1321-0 | Levier (B) | ARM 2, tension pulley | 1 | | | |
| | 8 | 62061-1310-0 | Galet | ASSY PULLEY, tension | 1 | | | |
| | ⑨ | 04612-00170 (04612-10170) | Circlip | CIR-CLIP, external | 1 | | | |
| | 10 | 62151-1317-0 | Couvercle | COVER | 1 | | | |
| | 11 | 62151-1316-0 | Joint caoutchouc | O-RING | 3 | | | |
| | 12 | 05511-50330 | Goupille fendue | PIN, split | 1 | | | |
| | 13 | 62151-1315-0 | Butée caoutchouc | RUBBER, support | 2 | | | |
| | 14 | 62071-1314-0 | Ressort de tension | SPRING, tension pulley | 1 | | | |
| × | 15 | 62271-1331-0 | Arbre levier | COMP. SHAFT, tension | 1 | | ~10005 | |
| | | 62271-1331-3 | | | | | 10001~ | C |
| | 16 | 01120-50816 | Boulon | BOLT | 3 | | | |

# 15. BOITE DE VITESSES
# MISSION GEAR GROUP

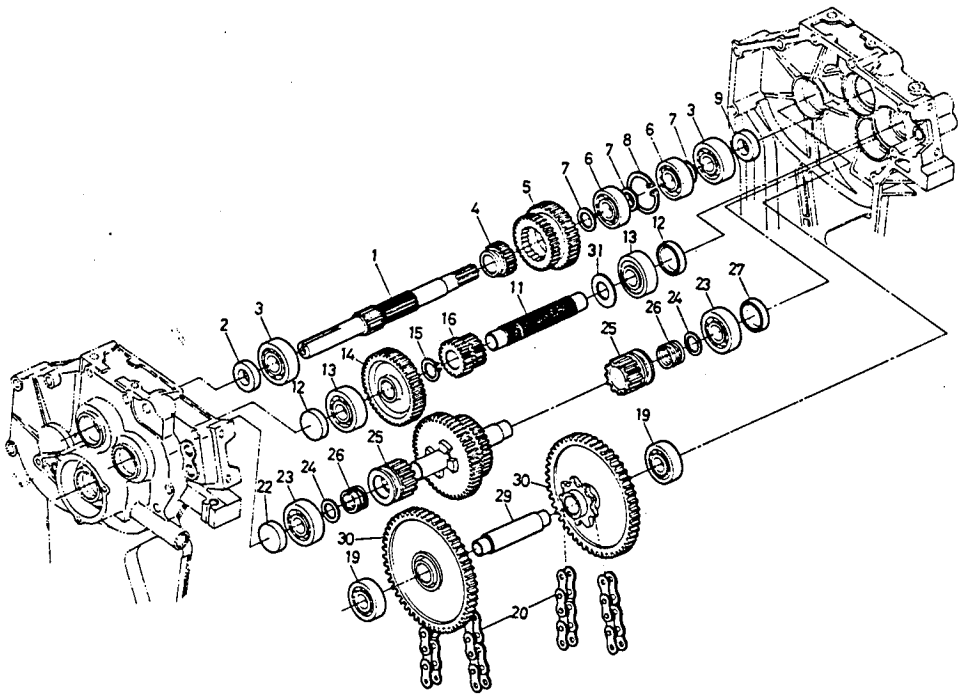

REF. No. ⑪ 62271-1421-2

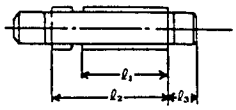

$\ell_1$ : 87.4 → 85.4mm
$\ell_2$ : 106 → 104mm
$\ell_3$ : 15 → 17mm

REF. No. ⑱ 62271-1430-2

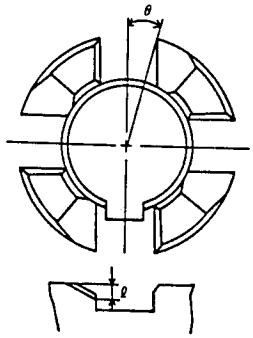

$\theta$ : 5° → 18.5°
$\ell$ : 2 → 2.5mm

| S | REF. No. | CODE No. | DESCRIPTION FRANÇAIS | DESCRIPTION ENGLISH | UNITÉ UNIT | ÉCHANGEABILITÉ INTERCHANGEABILITY EC IC No. | NUMÉRO DE SÉRIE SERIAL No. | REMARQUES REMARKS |
|---|---|---|---|---|---|---|---|---|
| | 1 | 62271-1411-0 | Arbre (1) | SHAFT, 1 | 1 | | | |
| | 2 | 09500-20358 | Baque joint | SEAL, oil | 1 | | | |
| | 3 | 08101-06304 | Roulement á billes (6304) | BEARING, ball (6304) | 2 | | | |
| | 4 | 62271-1412-0 | Pignon 18 | GEAR, spur 18 | 1 | | | |
| | 5 | 62271-1413-0 | Pignon 32-39 | GEAR, spur 32-39 | 1 | | | |
| | 6 | 08101-06204 | Roulement á billes (6204) | BEARING, ball (6204) | 2 | | | |
| | 7 | 62271-1414-0 | Entretoise | COLLAR | 3 | | | |
| | 8 | 04611-00470 | Circlip | CIR-CLIP, internal | 1 | | | |
| | 9 | 09500-17358 | Baque joint | SEAL, oil | 1 | | | |
| | 10 | 62252-1419-0 | Rondelle de règlage | SHIM | 1 | | | |
| □ | 11 | 62271-1421-0 | Arbre (2) | SHAFT, 2 | 1 | | ~10814 | |
| | | 62271-1421-2 | | | | | 10001~ | C |
| | 12 | 62271-1422-0 | Bouchon | PLUG | 2 | | | |
| | 13 | 08101-06304 | Roulement á billes (6304) | BEARING, ball (6304) | 2 | | | |
| | 14 | 62271-1423-0 | Pignon 44 | GEAR, spur 44 | 1 | | | |
| | 15 | 04612-00220 | Circlip | CIR-CLIP, external | 1 | | | |
| | 16 | 62271-1424-0 | Pignon 20-17 | GEAR, spur 20-17 | 1 | | | |
| | 17 | 62252-1419-0 | Rondelle de règlage | SHIM | 1 | | | |
| □ | 18 | 62271-1430-0 | Arbre (3) | COMP. SHAFT, 3 | 1 | | ~10814 | |
| | | 62271-1430-2 | | | | | 10001~ | C |
| | 19 | 08101-06303 | Roulement á billes (6303) | BEARING, ball (6303) | 2 | | | |
| | 20 | 62271-1443-0 | Chaîne | CHAIN | 2 | | | |
| | 21 | 62081-1438-0 | Rondelle de règlage | SHIM | 1 | | | |
| | 22 | 62271-1422-0 | Bouchon | PLUG | 1 | | | |
| | 23 | 08101-06304 | Roulement á billes (6304) | BEARING, ball (6304) | 2 | | | |
| | 24 | 62271-1414-0 | Entretoise | COLLAR | 2 | | | |
| | 25 | 62271-1433-0 | Pignon 12 | GEAR, spur 12 | 2 | | | |

# 15. BOITE DE VITESSES
# MISSION GEAR GROUP

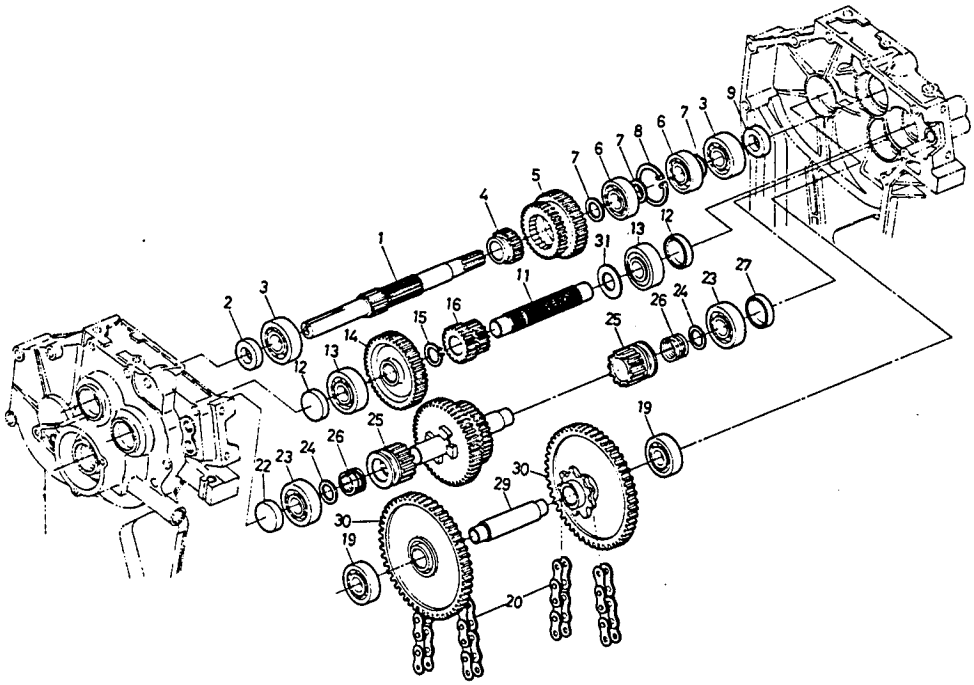


REF. No. ⑪ 62271-1421-2

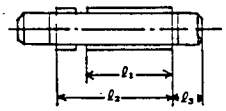


$\ell_1$ : 87.4 → 85.4mm
$\ell_2$ : 106 → 104mm
$\ell_3$ : 15 → 17mm

REF. No. ⑬ 62271-1430-2

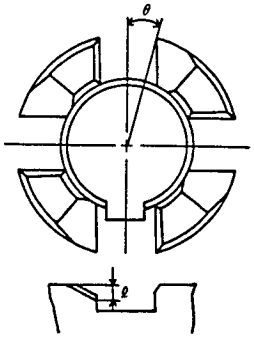


θ : 5° → 18.5°
ℓ : 2 → 2.5mm

| S | REF. No. | CODE No. | DESCRIPTION FRANÇAIS | DESCRIPTION ENGLISH | UNITÉ UNIT | ÉCHANGEABILITÉ INTERCHANGEABILITY EC IC No. No. | NUMÉRO DE SÉRIE SERIAL No. | REMARQUES REMARKS |
|---|---|---|---|---|---|---|---|---|
| | 26 | 62271-1434-0 | Ressort | SPRING, steering circuit | 2 | | | |
| | 27 | 62182-1434-0 | Bouchon | PLUG | 1 | | | |
| | 28 | 62252-1419-0 | Rondelle de règlage | SHIM | 1 | | | |
| | 29 | 62271-1441-0 | Arbre (4) | SHAFT 4 | 1 | | | |
| | 30 | 62271-1442-0 | Pignon 48-9 | G.W/SPROCKET, 48-9 | 2 | | | |
| | 31 | 62271-1414-0 | Entretoise | COLLAR | 1 | | 10815~ | A |

# 16. AXE HEXAGONAL WHEEL GROUP

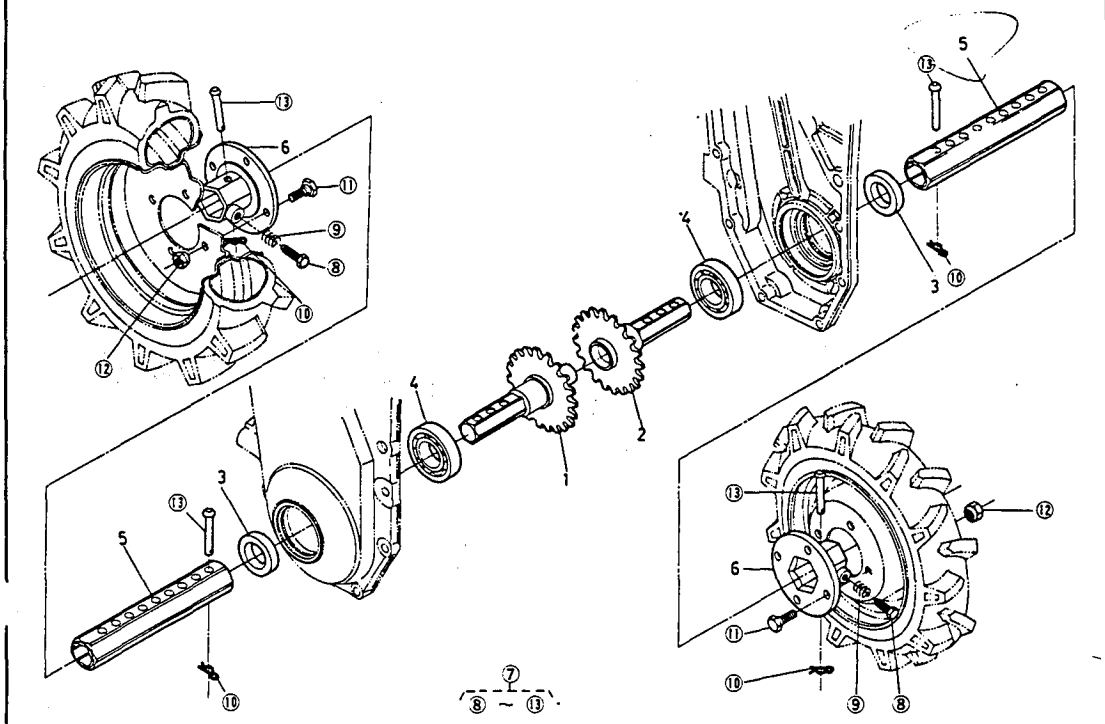


REF. No. ② 62271-1720-3
• Matière de le pignon de chaine
• Material of the sprocket wheel
S43C → SCM21

REF. No. ③ 62271-1719-1
• Diamètre extérieur
• Outside diameter
φ62 → φ68mm

| S | REF. No. | CODE No. | DESCRIPTION FRANÇAIS | DESCRIPTION ENGLISH | UNITÉ UNIT | ÉCHANGEABILITÉ INTERCHANGEABILITY E C I C No. No. | NUMÉRO DE SÉRIE SERIAL No. | REMARQUES REMARKS |
|---|---|---|---|---|---|---|---|---|
| | 1 | 62271-1710-0 | Axe (1) complet | COMP. AXLE | 1 | | | |
| □1 | 2 | 62271-1720-0 | Axe (2) complet | COMP. AXLE | 1 | | ~11802 | |
| | | 62271-1720-3 | | | | | 10001~ | C |
| □ | 3 | 09194-06211 | Baque joint | SEAL, oil | 2 | | ~11800 | |
| | | 62271-1719-0 | | | | | 11801~ | C |
| | 4 | 08101-06208 | Roulement á billes(6208) | BEARING, ball(6208) | 2 | | | |
| | 5 | 62082-1725-0 | Axe hexagonal | TUBE HEXAGON, wheel | 2 | | | |
| | 6 | 62082-1711-0 | Moyeu | HUB HEXAGON, wheel | 2 | | | |
| | 7 | 62271-1730-0 | Axe pieces complet | ASSY PARTS, axle | 1 | | | ⑧~⑬ |
| | 8 | 62131-1736-3 | Boulon | BOLT, wheel set | 2 | | | |
| | 9 | 63512-1723-0 | Ressort | SPRING, set bolt | 2 | | | |
| | 10 | 62131-1729-0 | Epingle | PIN, snap | 4 | | | |
| | 11 | 62063-1756-0 | Boulon | BOLT, wheel set | 8 | | | |
| | 12 | 62063-1757-0 | Ecrou | NUT, wheel set | 8 | | | |
| | 13 | 62131-1732-0 | Goupille | PIN, wheel tube | 4 | | | |

# 17. CHANGEMENT 1
# CHANGE GROUP 1

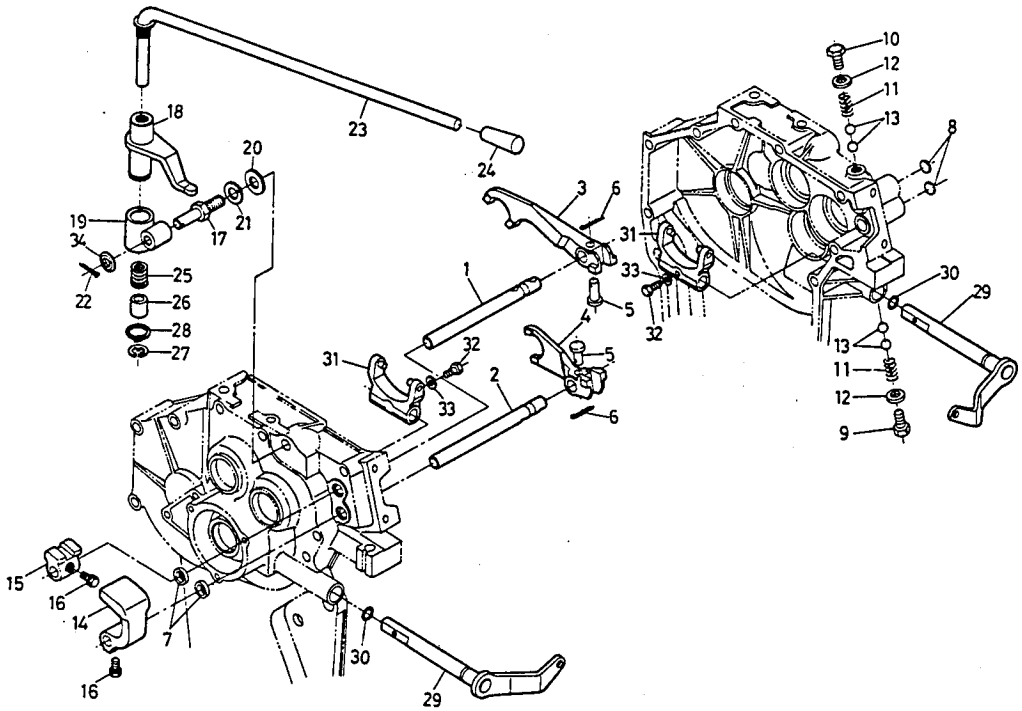


REF. No. ⑧
62271-1826-1 06311-75018

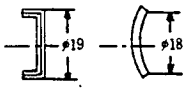


REF. No. ⑬ 62271-1831-2

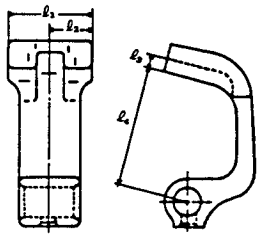


$\ell_1$ : 34 → 36mm
$\ell_2$ : 17 → 19mm
$\ell_3$ : 6.5 → 7mm
$\ell_4$ : 48 → 47.5mm

REF. No. ⑮ 62271-1832-2

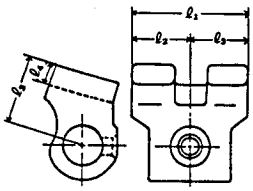


$\ell_1$ : 34 → 38mm
$\ell_2$ : 17 → 19mm
$\ell_3$ : 21 → 21.5mm
$\ell_4$ : 6.5 → 7mm

| S | REF. No. | CODE No. | DESCRIPTION FRANÇAIS | DESCRIPTION ENGLISH | UNITÉ UNIT | ÉCHANGEABILITÉ INTERCHANGEABILITY EC IC No. No. | NUMÉRO DE SÉRIE SERIAL No. | REMARQUES REMARKS |
|---|---|---|---|---|---|---|---|---|
| | 1 | 62271-1821-0 | Axe de fourchette 1 | ROD, fork 1 | 1 | | | |
| | 2 | 62271-1822-0 | Axe de fourchette 2 | ROD, fork 2 | 1 | | | |
| | 3 | 62271-1823-0 | Fourchette 1 | FORK, shift 1 | 1 | | | |
| | 4 | 62271-1824-0 | Fourchette 2 | FORK, shift 2 | 1 | | | |
| | 5 | 05122-50522 | Goupille | PIN, joint | 2 | | | |
| | 6 | 05511-51210 | Goupille fendue | PIN, split | 2 | | | |
| | 7 | 09230-12185 | Baque joint | SEAL, oil | 2 | | | |
| | 8 | 62271-1826-0 | Bouchon | PLUG | 2 | | 10051~11800 | A |
| | | 06311-75018 | | | | | 10001~ | A |
| | 9 | 62271-1825-0 | Boulon | BOLT | 1 | | | |
| | 10 | 62081-1833-0 | Boulon | BOLT | 1 | | | |
| | 11 | 62231-1853-0 | Ressort | SPRING, stopper | 2 | | | |
| | 12 | 04714-00100 | Joint | PACKING | 2 | | | |
| | 13 | 07715-01605 | Bille | BALL | 4 | | | |
| × | 14 | 62271-1831-0 | Support (1) levier | HOLDER 1, lever | 1 | | ~10802 | |
| | | 62271-1831-2 | | | | 2 | | C |
| × | 15 | 62271-1832-0 | Support (1) levier | HOLDER 1, lever | 1 | | 10001~ | |
| | | 62271-1832-2 | | | | 2 | | C |
| | 16 | 01202-50616 | Boulon | BOLT | 2 | | | |
| | 17 | 62271-1833-0 | Appui coudé | FULCRUM, arm s-change | 1 | | | |
| | 18 | 62271-1834-0 | Levier dinversion | COMP. ARM, speed-change | 1 | | | |
| | 19 | 62271-1837-0 | Appui coudé | FULCRUM, arm s-change | 1 | | | |
| | 20 | 04013-50120 | Rondelle | WASHER, plain | 1 | | | |
| | 21 | 04512-50120 | Rondelle grower | WASHER, spring | 1 | | | |
| | 22 | 05511-50318 | Goupille fendue | PIN, split | 1 | | | |
| | 23 | 62081-1837-0 | Levier | LEVER, speed change | 1 | | | |
| | ㉔ | 66591-4211-1 (54201-2327-0) | Poignée | GRIP, 2 | 1 | | | |
| | 25 | 62131-1853-0 | Ressort | SPRING | 1 | | | |

# 17. CHANGEMENT 1
# CHANGE GROUP 1

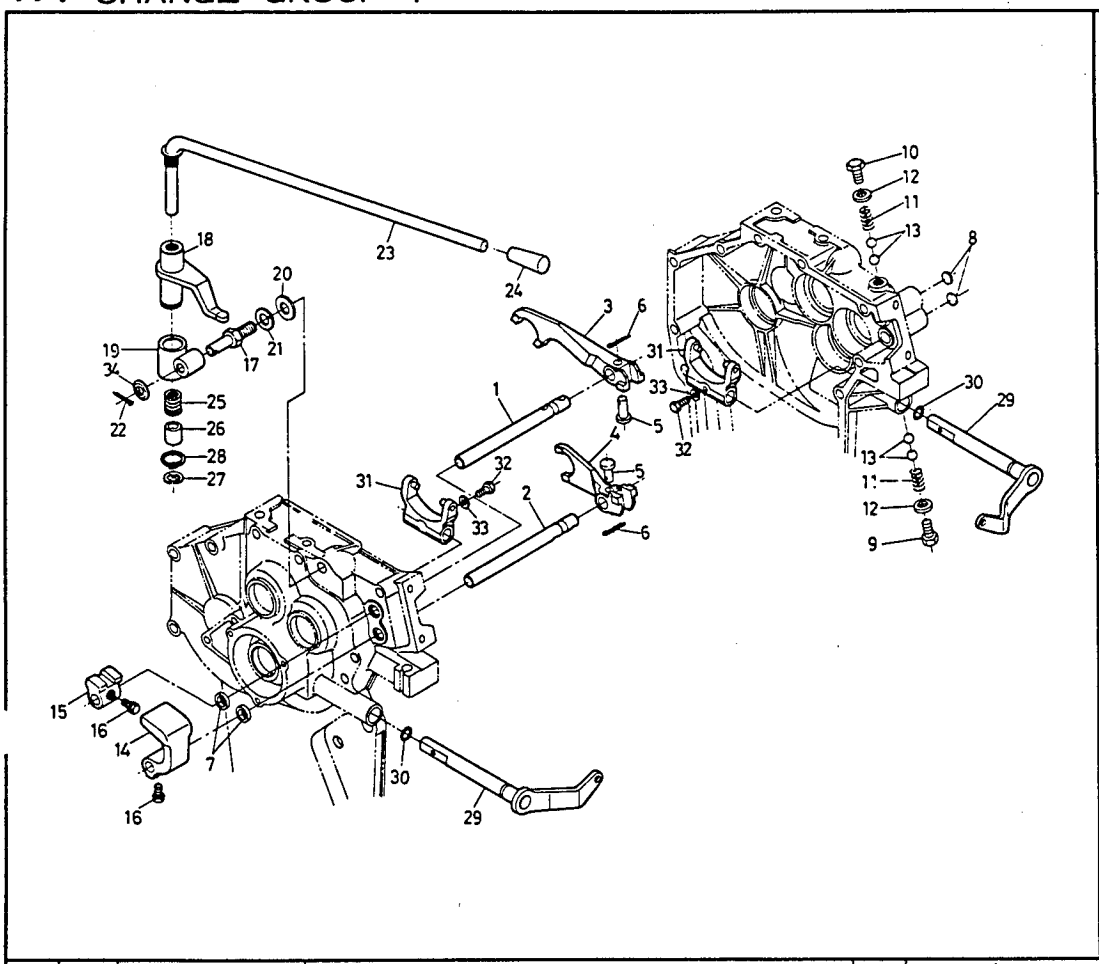


| S | REF. No. | CODE No. | DESCRIPTION FRANCAIS | DESCRIPTION ENGLISH | UNITÉ UNIT | ÉCHANGEABILITÉ INTERCHANGEABILITY E C I C | No. No. | NUMÉRO DE SÉRIE SERIAL No. | REMARQUES REMARKS |
|---|---|---|---|---|---|---|---|---|---|
| | 26 | 61041-4245-0 | Entretoise | COLLAR | 1 | | | | |
| | ㉗ | 04613-00070 (04613-10070) | Circlip | CIR-CLIP, external | 1 | | | | |
| | ㉘ | 04612-00210 (04612-10210) | Circlip | CIR-CLIP, external | 1 | | | | |
| | ㉙ | 62271-1881-0 | Axe | ROD | 2 | | | | |
| | 30 | 04811-06100 | Joint caoutchouc | O RING | 2 | | | | |
| | 31 | 62271-1882-0 | Fourchette | FORK, steering | 2 | | | | |
| | 32 | ~~01053-50518~~ | ~~Boulon~~ | ~~BOLT~~ | ~~2~~ | | | | |
| | 33 | 04512-50050 | Rondelle grower | WASHER, spring | 2 | | | | |
| | 34 | 62151-4241-2 | Ressort | SPRING | 1 | | 10006~ | | A |

# 18. MANCHERON HANDLE GROUP

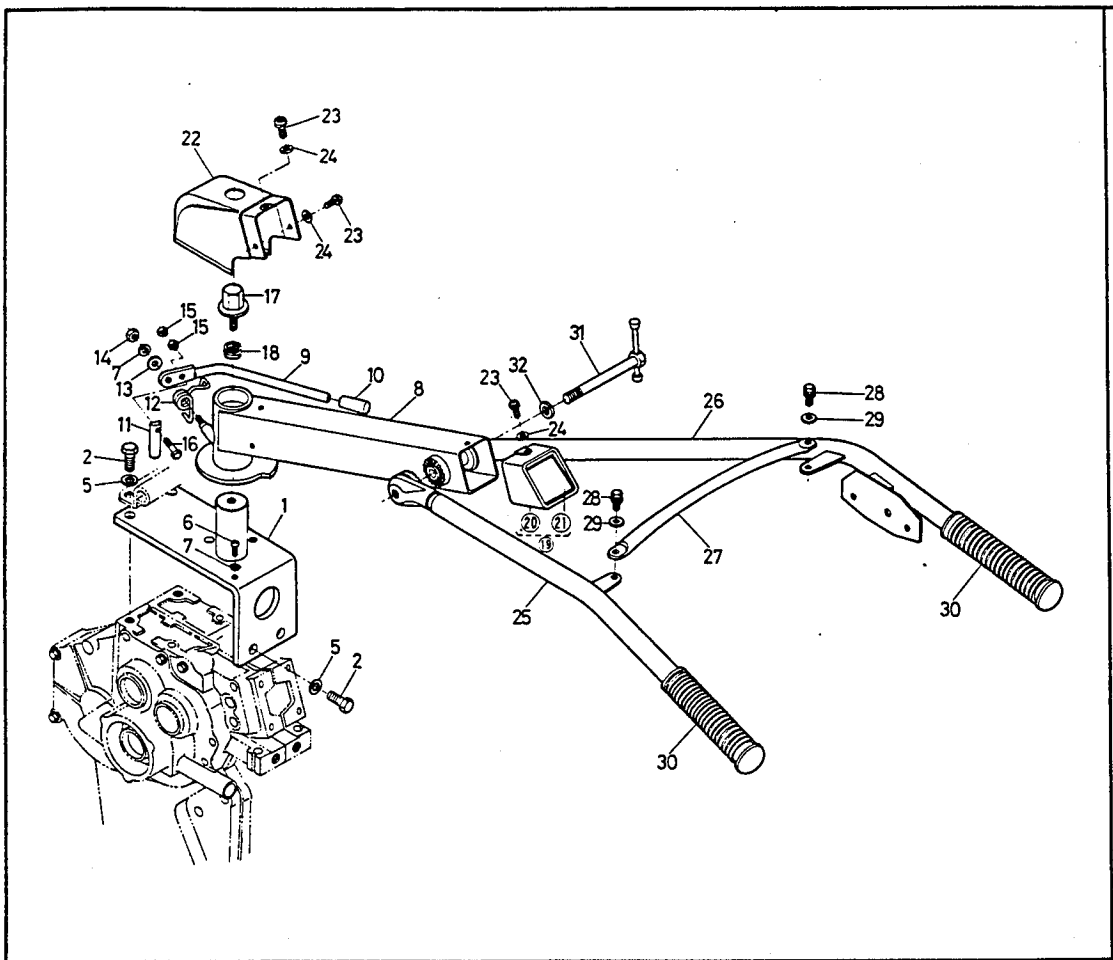


| S | REF. No. | CODE No. | DESCRIPTION FRANÇAIS | DESCRIPTION ENGLISH | UNITÉ UNIT | ÉCHANGEABILITÉ INTERCHANGEABILITY EC No. IC No. | NUMÉRO DE SÉRIE SERIAL No. | REMARQUES REMARKS |
|---|---|---|---|---|---|---|---|---|
| | 1 | 62271-4111-0 | Support | HOLDER, handle | 1 | | | |
| | 2 | 01150-51230 | Boulon | BOLT | 4 | | | |
| | 3 | 62081-4112-0 | Rondelle de règlage | SHIM | 1 | | | |
| | 4 | 62081-4113-0 | Rondelle de règlage | SHIM | 1 | | | |
| | 5 | 04512-50120 | Rondelle grower | WASHER, spring | 4 | | | |
| | 6 | 03014-50810 | Vis | SCREW, pan head | 2 | | | |
| | 7 | 04512-50080 | Rondelle grower | WASHER, spring | 3 | | | |
| | 8 | 62271-4120-0 | Cardre complet volant | COMP. FRAME, handle | 1 | | | |
| | 9 | 62081-4131-0 | Levier | LEVER | 1 | | | |
| | 10 | 66591-4211-1 (54201-2327-0) | Poignée | GRIP, 2 | 1 | | | |
| | 11 | 62081-4132-0 | Goupille | PIN, lock | 1 | | | |
| | 12 | 62081-4133-0 | Ressort | SPRING | 1 | | | |
| | 13 | 04013-50080 | Rondelle | WASHER, plain | 1 | | | |
| | 14 | 02114-50080 | Ecrou | NUT | 1 | | | |
| | 15 | 02014-50060 | Ecrou | NUT | 2 | | | |
| | 16 | 62081-4136-0 | Boulon | BOLT | 1 | | | |
| | 17 | 62081-4134-0 | Boulon | BOLT | 1 | | | |
| | 18 | 62081-4135-0 | Ressort | SPRING | 1 | | | |
| | 19 | 62271-4130-0 | Couvercle (1) complet | ASSY COVER, handle | 1 | | | 20, 21 FRANCE |
| | | 62275-4130-0 | | | | | | UNITED, KINGDOM |
| | 20 | 62082-4141-0 | Couvercle (1) | COVER, handle | 1 | | | |
| | 21 | 62271-4811-0 | Marque | LABEL, speed change | 1 | | | FRANCE |
| | | 62272-4811-1 | | | | | | UNITED, KINGDOM |
| | 22 | 62271-4142-0 | Couvercle (2) | COVER, handle | 1 | | | |
| | 23 | 03004-50616 | Vis | SCREW, with washer | 4 | | | |
| | 24 | 04013-50060 | Rondelle | WASHER, plain | 4 | | | |
| | 25 | 62271-4150-0 | Mancheron (G) | COMP. HANDLE, LH | 1 | | | |
| | 26 | 62271-4160-0 | Mancheron (D) | COMP. HANDLE, RH | 1 | | | |
| | 27 | 62082-4171-0 | Barre | STAY, handle | 1 | | | |
| | 28 | 01120-50818 | Boulon | BOLT | 2 | | | |
| | 29 | 04013-50080 | Rondelle grower | WASHER, plain | 2 | | | |
| | 30 | 63633-4131-0 | Poignée | GRIP, handle | 2 | | | |
| | 31 | 62082-4180-0 | Vis de blocage | ASSY BOLT, jack | 1 | | | |
| | 32 | 04512-50120 | Rondelle grower | WASHER, spring | 1 | | | |

# 19. CHANGEMENT DE VITESSES
# CHANGE GROUP

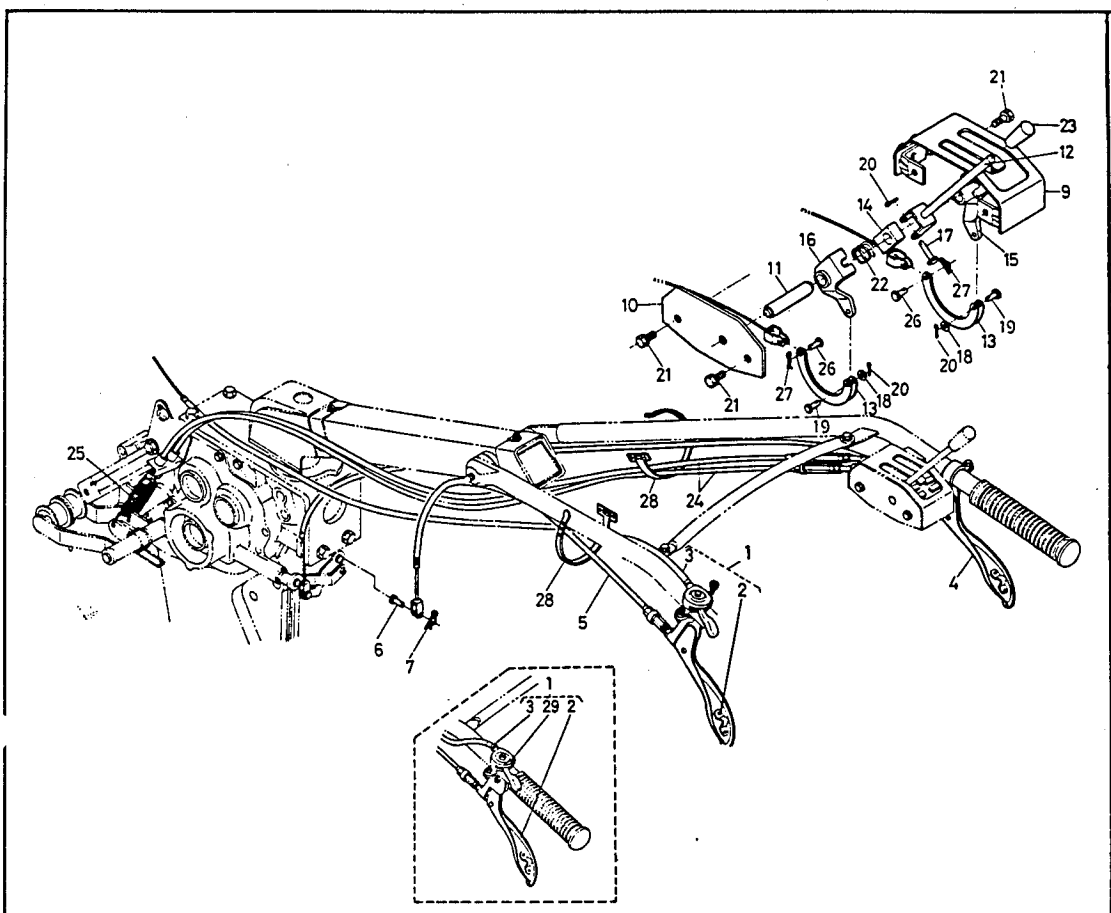

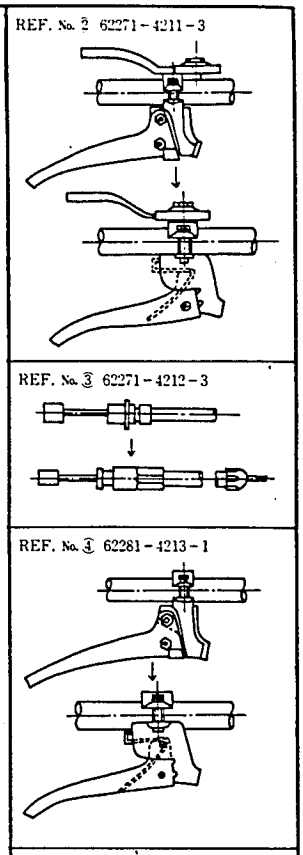


| S | REF. No. | CODE No. | DESCRIPTION FRANÇAIS | DESCRIPTION ENGLISH | UNITÉ UNIT | ÉCHANGEABILITÉ INTERCHANGEABILITY EC No. IC No. | NUMÉRO DE SÉRIE SERIAL No. | REMARQUES REMARKS |
|---|---|---|---|---|---|---|---|---|
| | 1 | 62271-4210-0 | Poignée crabot complet | ASSY LEVER, steering clutch | 1 | | | ②, ③ |
| | | 62271-4210-3 | | | | | | |
| × | 2 | 62271-4211-0 | Poignée crabot (G) | LEVER, steering clutch LH | 1 | | ~11300 | |
| | | 62271-4211-3 | | | | | 11301~ | C |
| □ | 3 | 62271-4212-0 | Cable de gaz | WIRE, throttle | 1 | | ~11800 | |
| | | 62271-4212-3 | | | | | 11801~ | C |
| × | 4 | 62271-4213-0 | Poignée crabot (D) | LEVER, steering clutch RH | 1 | | ~11300 | |
| | | 62281-4213-0 | | | | | 11301~ | C |
| | 5 | 62271-4214-0 | Cable de crabot | WIRE, steering clutch | 2 | | | |
| | 6 | 05122-50614 | Axe | PIN, joint | 2 | | | |
| | 7 | 62101-4229-0 | Epingle | PIN, snap | 2 | | | |
| | 8 | 62081-4210-0 | Commande embrayage compléte | ASSY CLUTCH, tension | 1 | | | |
| | 9 | 62081-4211-0 | Carter | CASE, tension | 1 | | | |
| | 10 | 62081-4212-0 | Couvercle | COVER, tension case | 1 | | | |
| | 11 | 62081-4213-0 | Axe | SHAFT | 1 | | | |
| | 12 | 62081-4214-0 | Levier | LEVER, clutch | 1 | | | |
| | 13 | 62081-4215-0 | Levier | JOINT, wire | 2 | | | |
| | 14 | 62081-4216-0 | Levier | JOINT | 1 | | | |
| | 15 | 62081-4217-0 | Support (D) | SUPPORT, RH | 1 | | | |
| | 16 | 62081-4218-0 | Support (G) | SUPPORT, LH | 1 | | | |
| | 17 | 05122-50630 | Axe | PIN, joint | 1 | | | |
| | 18 | 04012-50060 | Rondelle | WASHER, plain | 2 | | | |
| | 19 | 05122-50614 | Axe | PIN, joint | 2 | | | |
| | 20 | 05511-51612 | Goupille fendue | PIN, split | 3 | | | |
| | 21 | 01120-50816 | Boulon | BOLT | 4 | | | |
| | 22 | 62081-4221-0 | Ressort | SPRING | 1 | | | |
| | 23 | 34150-2456-0 | Poignée | GRIP, lever | 1 | | | |
| | 24 | 62271-4221-0 | Cable embrayage | WIRE, main clutch | 2 | | | |
| | 25 | 62271-4222-0 | Poignée | SPRING | 2 | | | |
| | 26 | 05122-50614 | Axe | PIN, joint | 2 | | | |
| | 27 | 62101-4229-0 | Epingle | PIN, snap | 2 | | | |
| | 28 | 63763-4137-0 | Attache | BAND, wire | 2 | | | |
| | 29 | 61111-4822-0 | | LABEL | 1 | | | UNITED, KINGDOM |

# 20. MARQUE
# LABEL GROUP

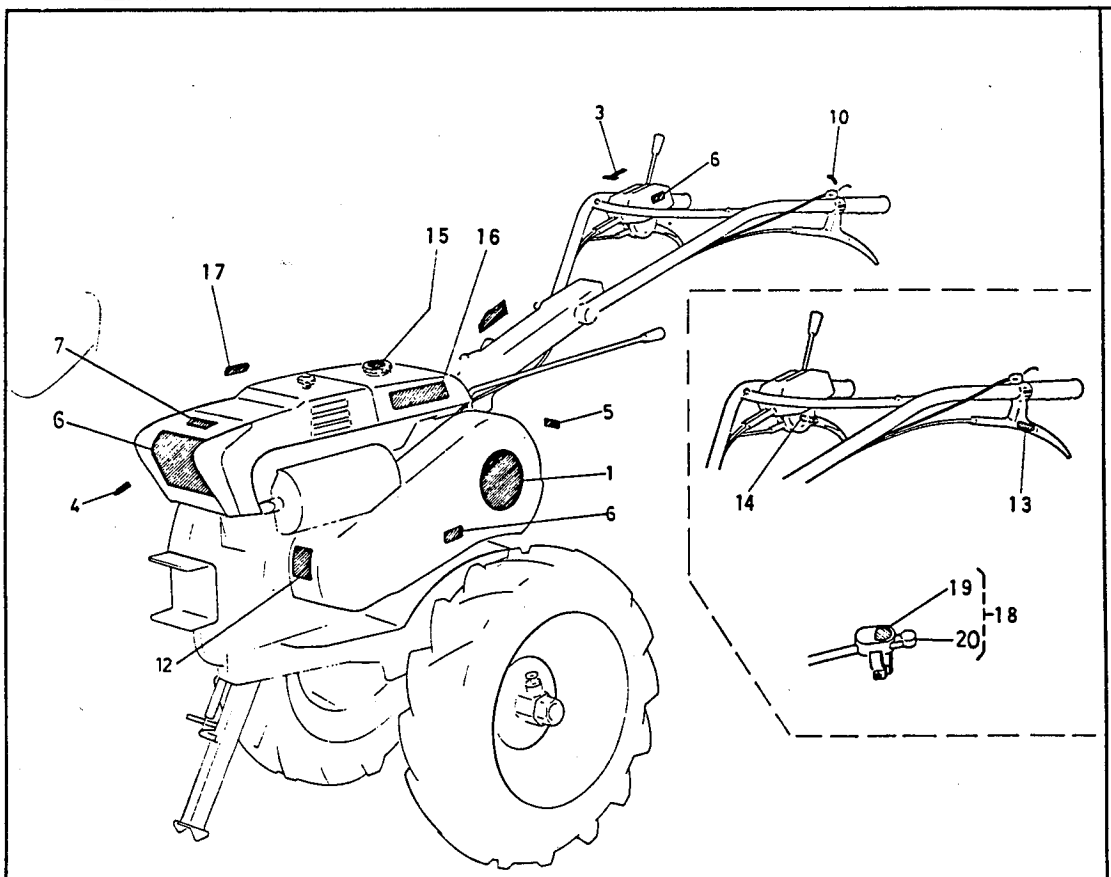


| S | REF. No. | CODE No. | DESCRIPTION FRANÇAIS | DESCRIPTION ENGLISH | UNITÉ UNIT | ÉCHANGEABILITÉ INTERCHANGEABILITY EC No. TC No. | NUMÉRO DE SÉRIE SERIAL No. | REMARQUES REMARKS |
|---|---|---|---|---|---|---|---|---|
| | 1 | 62271-4812-0 | Marque | MARK, form | 1 | | | |
| | 2 | 62271-4813-0 | Marque | LABEL | 1 | | | FRANCE |
| | | 62272-4813-1 | | | | | | UNITED, KINGDOM |
| | 3 | 62271-4814-0 | Marque | LABEL | 1 | | | FRANCE |
| | | 62481-4813-0 | | | | | | UNITED, KINGDOM |
| | 4 | 61011-4919-0 | Marque | LABEL | 1 | | | FRANCE |
| | | 62272-4815-0 | | | | | | UNITED, KINGDOM |
| | 5 | 62082-4716-0 | Marque | LABEL | 1 | | | FRANCE |
| | | 62272-4816-0 | | | | | | UNITED, KINGDOM |
| | 6 | 62073-4722-0 | Marque | LABEL | 2 | | | FRANCE |
| | | 62171-4719-0 | | | | | | UNITED, KINGDOM |
| | 7 | 62171-4714-0 | Marque | LABEL | 1 | | | |
| | 8 | 62073-4731-0 | Marque | LABEL | 1 | | | |
| | 9 | 62271-4816-0 | Marque | LABEL | 1 | | | FRANCE |
| | | 62272-4817-1 | | | | | | UNITED, KINGDOM |
| | 10 | 62271-4817-0 | Marque | LABEL | 1 | 1 ~ | ~11300 | |
| | 11 | 61041-4711-0 | Marque | LABEL | 1 | | | |
| | 12 | 13518-8831-0 | Marque | LABEL | 1 | | | FRANCE |
| | | 13613-8831-0 | | | | | | UNITED, KINGDOM |
| | 13 | 61161-4822-0 | Marque | LABEL | 1 | | | |
| | 14 | 61161-4823-0 | Marque | LABEL | 1 | | | |
| | 15 | 61025-4822-0 | Marque | LABEL | 1 | | | |
| | 16 | 61025-4824-0 | Marque | LABEL | 1 | | | |
| | 17 | 61036-4714-0 | Marque | LABEL | 1 | | | UNITED, KINGDOM |
| | 18 | 62275-5510-0 | | ASSY, switch | 1 | | | ⑲, ⑳ |
| | 19 | 61132-5511-0 | | LABEL, switch | 1 | | | |
| | 20 | 62275-5512-0 | | SWITCH | 1 | | | |

# 21. SUPPORT MOTEUR
# FRONT FRAME GROUP

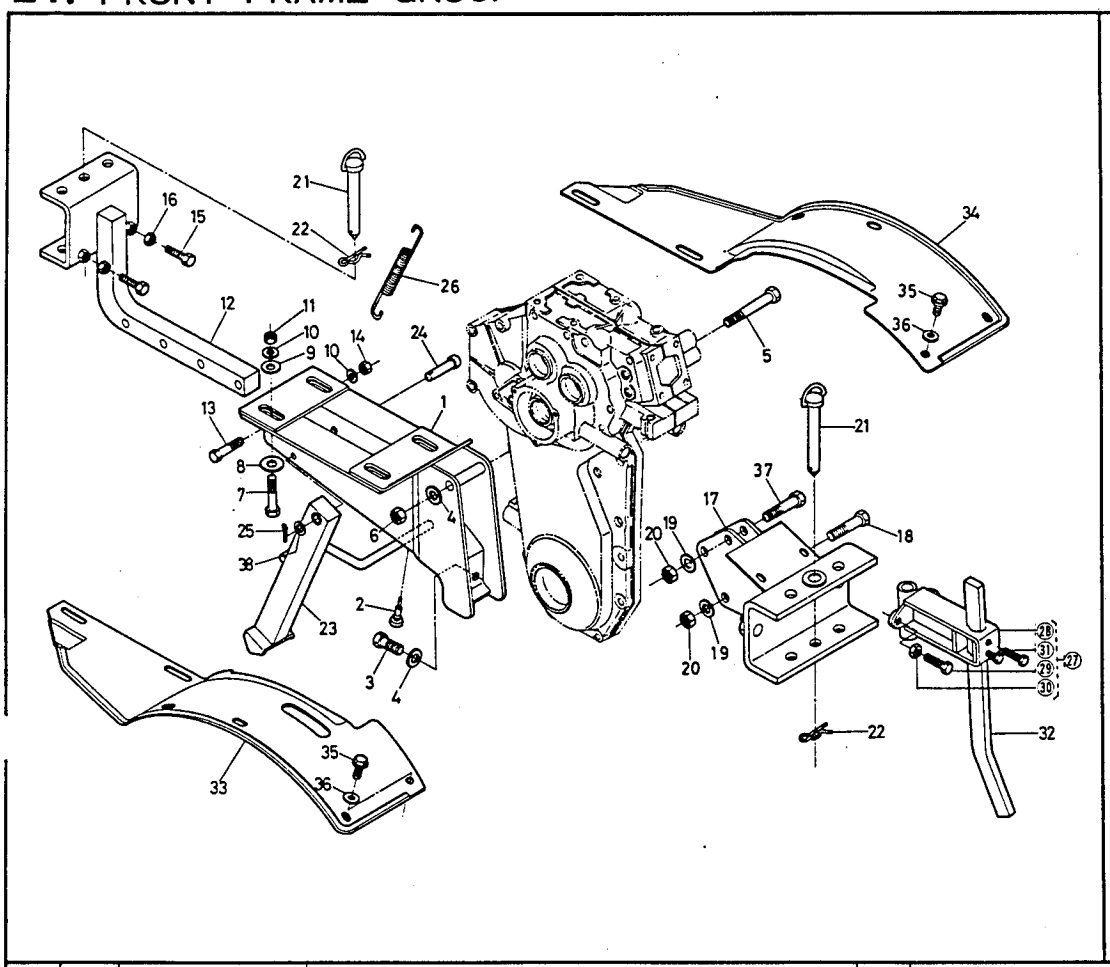


| S | REF. No. | CODE No. | DESCRIPTION FRANÇAIS | DESCRIPTION ENGLISH | UNITÉ UNIT | ÉCHANGEABILITÉ INTERCHANGEABILITY EC IC No. No. | NUMÉRO DE SÉRIE SERIAL No. | REMARQUES REMARKS |
|---|---|---|---|---|---|---|---|---|
| | 1 | 62271-5110-0 | Support moteur complet | COMP. FRAME, flont | 1 | | | |
| | 2 | 63611-5235-0 | Butée | RUBBER | 1 | | | |
| | 3 | 01153-51230 | Boulon | BOLT | 2 | | | |
| | 4 | 04513-50120 | Rondelle grower | WASHER, spring | 3 | | | |
| | 5 | 01173-51285 | Boulon | BOLT | 1 | | | |
| | 6 | 02174-50120 | Ecrou | NUT | 1 | | | |
| | 7 | 01170-51055 | Boulon | BOLT | 4 | | | |
| | 8 | 04015-50100 | Rondelle | WASHER, plain | 4 | | | |
| | 9 | 04013-50100 | Rondelle | WASHER, plain | 4 | | | |
| | 10 | 04512-50100 | Rondelle grower | WASHER, spring | 6 | | | |
| | 11 | 02118-50100 | Ecrou | NUT | 4 | | | |
| | 12 | 62271-5131-0 | Attelage | COMP. HITCH, flont | 1 | | | |
| | 13 | 01173-51045 | Boulon | BOLT | 2 | | | |
| | 14 | 02176-50100 | Ecrou | NUT | 2 | | | |
| | 15 | 01172-51035 | Boulon | BOLT | 2 | | | |
| | 16 | 02116-50100 | Ecrou | NUT | 2 | | | |
| | 17 | 62271-5210-0 | Attelage | COMP. HITCH | 1 | | | |
| | 18 | 01173-51255 | Boulon | BOLT | 2 | | | |
| | 19 | 04513-50120 | Rondelle grower | WASHER, spring | 3 | | | |
| | 20 | 02176-50120 | Ecrou | NUT | 3 | | | |
| | 21 | 62151-5215-0 | Cheville | PIN, hitch | 2 | | | |
| | 22 | 05515-51600 (05515-55000) | Epingle | PIN, snap | 2 | | | |
| | 23 | 62271-5220-0 | Bequille complet | COMP. STAND | 1 | | | |
| | 24 | 05122-50850 | Axe | PIN, joint | 1 | | | |
| | 25 | 05511-50215 | Goupille fendue | PIN, split | 1 | | | |

# 21. SUPPORT MOTEUR
# FRONT FRAME GROUP

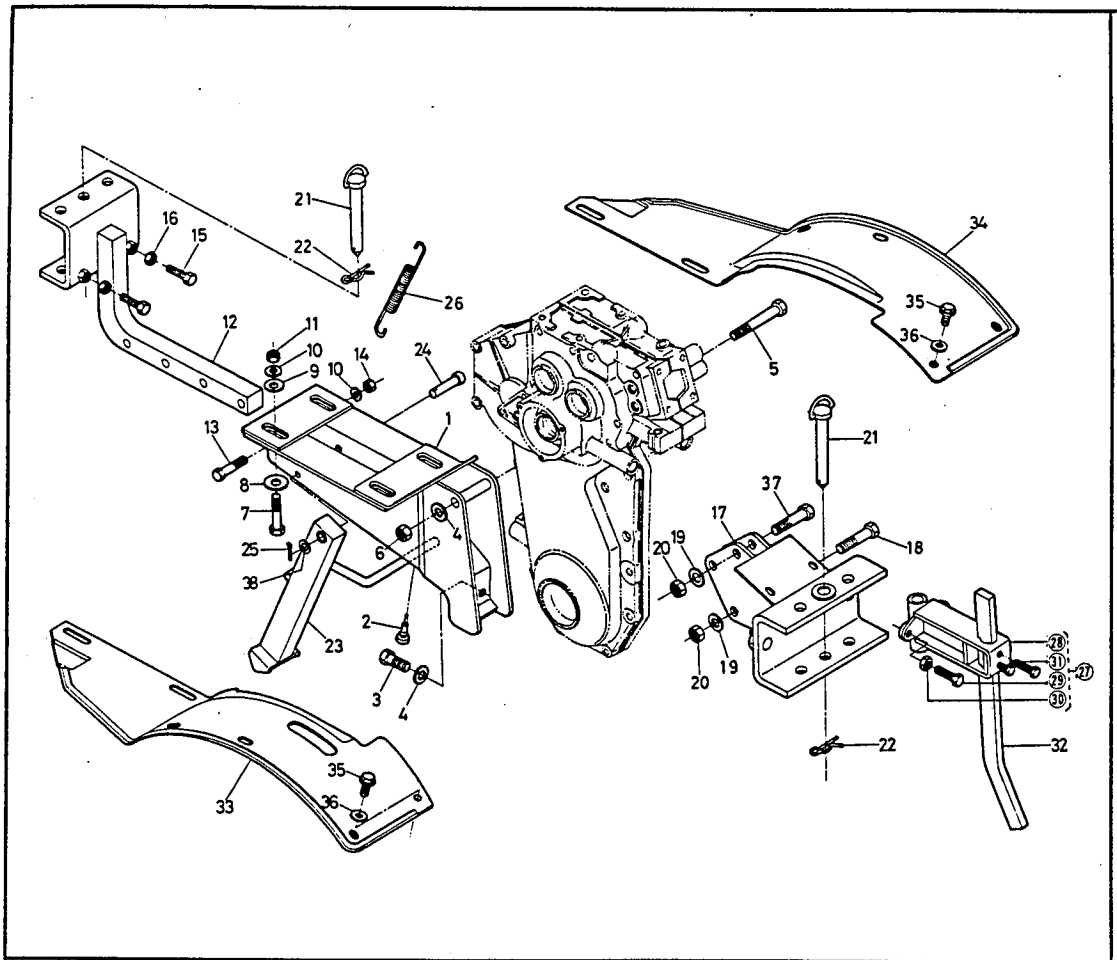


| S | REF. No. | CODE No. | DESCRIPTION FRANÇAIS | DESCRIPTION ENGLISH | UNITÉ UNIT | ÉCHANGEABILITÉ INTERCHANGEABILITY EC No. IC No. | NUMÉRO DE SÉRIE SERIAL No. | REMARQUES REMARKS |
|---|---|---|---|---|---|---|---|---|
| | 26 | 63763-5213-0 | Ressort | SPRING, stand | 1 | | | |
| | 27 | 62271-6110-0 | Attelage universel complet | ASSY HITCH, universal | 1 | | | ㉘~㉛ |
| | 28 | 62271-6111-0 | Attelage | HITCH, universal | 1 | | | |
| | 29 | 01152-51245 | Boulon | BOLT | 2 | | | |
| | 30 | 02112-50120 | Ecrou | NUT | 4 | | | |
| | 31 | 61011-5215-0 | Boulon | BOLT, set | 2 | | | |
| | 32 | 92316-0023-0 | Eperon | BAR, resistance | 1 | | | |
| | 33 | 62271-5240-0 | Pare-boue (G) | COMP. FENDER, aux LH | 1 | | | |
| | 34 | 62271-5250-0 | Pare-boue (D) | COMP. FENDER, aux RH | 1 | | | |
| | 35 | 01120-50818 | Boulon | BOLT | 2 | | | |
| | 36 | 04013-50080 | Rondelle | WASHER, plain | 2 | | | |
| | 37 | 01173-51280 | Boulon | BOLT | 1 | | | |
| | 38 | 04013-50080 | Rondelle | WASHER, plain | 1 | | | |

# 22. CAPOT-RESERVOIR
# BONNET GROUP

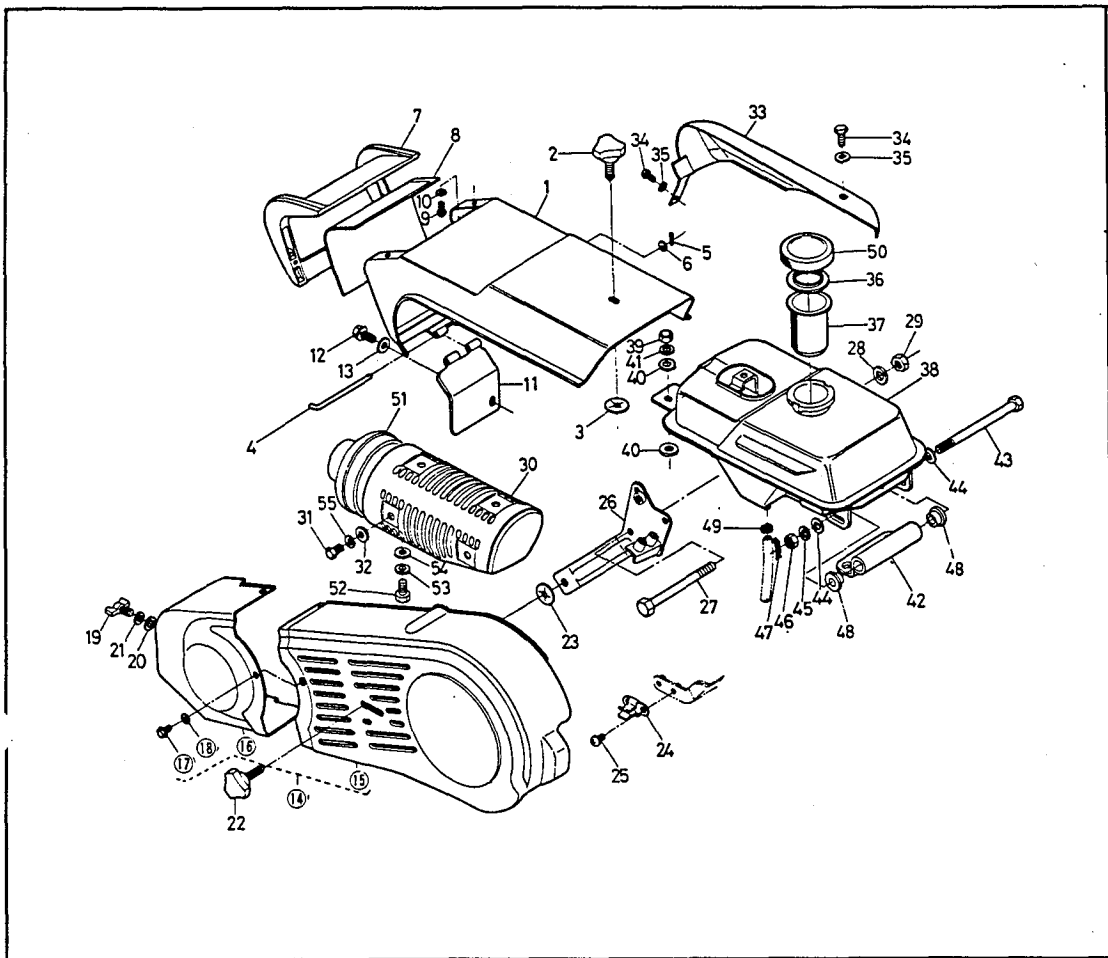

REF. No. ⑮ 62271-5431-3

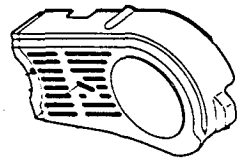

REF. No. ⑯ 62271-5435-1

REF. No. ⑳ 62271-5445-2

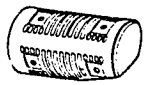

| S | REF. No. | CODE No. | DESCRIPTION FRANÇAIS | DESCRIPTION ENGLISH | UNITÉ UNIT | ÉCHANGEABILITÉ INTERCHANGEABILITY EC IC No. No. | NUMÉRO DE SÉRIE SERIAL No. | REMARQUES REMARKS |
|---|---|---|---|---|---|---|---|---|
| | 1 | 62271-5410-0 | Capot | COMP. BONNET | 1 | | | |
| | 2 | 63763-5257-0 | Vis capot | GRIP, tool box | 1 | | | |
| | 3 | 62151-5454-0 | Rondelle frein | SET, screw | 1 | | | |
| | 4 | 61042-5335-0 | Axe | PIN, bonnet stay | 1 | | | |
| | 5 | 05511-51210 | Goupille fendue | PIN, split | 1 | | | |
| | 6 | 04013-50040 | Rondelle | WASHER, plain | 1 | | | |
| | 7 | 62151-5451-0 | Enjoliveur | GRILL, light | 1 | | | |
| | 8 | 62082-5412-0 | Protège-phare | PLATE, light grill | 1 | | | |
| | 9 | 01202-50610 | Boulon | BOLT | 4 | | | |
| | 10 | 04013-50060 | Rondelle | WASHER, plain | 4 | | | |
| | 11 | 62271-5421-0 | Support capot | STAY, bonnet | 1 | | | |
| | 12 | 01120-50816 | Boulon | BOLT | 2 | | | |
| | 13 | 04013-50080 | Rondelle | WASHER, plain | 2 | | | |
| □ | 14 | 62271-5430-0 | Carter | ASSY COVER, belt | 1 | | | ⑮~⑱ |
| | | 62271-5430-3 | | | | | | B ⑮~⑱ |
| □ | 15 | 62271-5431-0 | Carter (A) | COMP. COVER, belt 1 | 1 | | ~10802 | |
| | | 62271-5431-4 | | | | | 10803~ | B |
| □ | 16 | 62271-5435-0 | Carter (B) | COMP. COVER, belt 2 | 1 | | ~10802 | |
| | | 62271-5435-2 | | | | | 10001~ | B |
| | 17 | 01202-50612 | Boulon | BOLT | 3 | | | |
| | 18 | 04013-50060 | Rondelle | WASHER, plain | 3 | | | |
| | 19 | 01811-50818 | Vis papillon | BOLT, wing | 1 | | | |
| | 20 | 04013-50080 | Rondelle | WASHER, plain | 1 | | | |
| | 21 | 04512-50080 | Rondelle grower | WASHER, spring | 1 | | | |
| | 22 | 63763-5257-0 | Vis | GRIP, tool box | 1 | | | |
| | 23 | 62151-5454-0 | Rondelle frein | SCREW, set | 1 | | | |
| | 24 | 62271-5438-0 | Support | STOPPER | 1 | | | |
| | 25 | 03004-50612 | Vis | SCREW, with washer | 2 | | | |
| | 26 | 62271-5440-0 | Support | COMP. SUPPORT, belt C | 1 | | | |
| | 27 | 62081-1118-0 | Boulon | BOLT | 2 | | | |
| | 28 | 04512-50080 | Rondelle grower | WASHER, spring | 2 | | | |
| | 29 | 02114-50080 | Ecrou | NUT | 2 | | | |
| □ | 30 | 62271-5445-0 | Enjoliveur (A) | COVER, muffler 1 | 1 | | ~10802 | |
| | | 62271-5445-3 | | | | | 10803~ | C |
| | | | | | | | | |

# 22. CAPOT-RESERVOIR
# BONNET GROUP

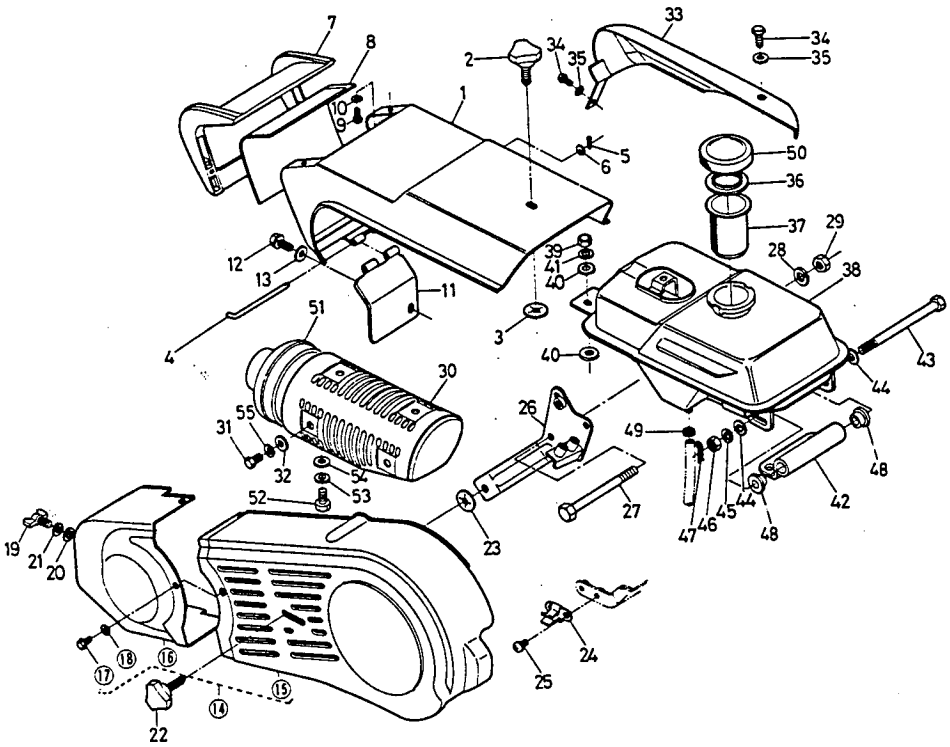


REF. No. 15 62271-5431-3

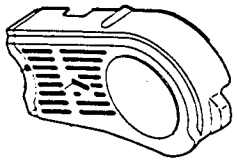

REF. No. 16 62271-5435-1

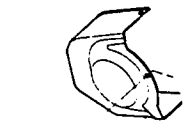

REF. No. 30 62271-5445-2

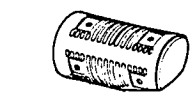

| S | REF. No. | CODE No. | DESCRIPTION FRANÇAIS | DESCRIPTION ENGLISH | UNITÉ UNIT | ÉCHANGEABILITÉ INTERCHANGEABILITY EC IC No. | NUMÉRO DE SÉRIE SERIAL No. | REMARQUES REMARKS |
|---|---|---|---|---|---|---|---|---|
| | 31 | 01150-50814 | Boulon | BOLT | 4 | | | |
| | 32 | 04013-20080 | Rondelle | WASHER, plain | 4 | | | |
| | 33 | 62271-5451-0 | Enjoliveur | COVER | 1 | | | |
| | 34 | 01202-50612 | Boulon | BOLT | 2 | | | |
| | 35 | 04013-50060 | Rondelle | WASHER, plain | 2 | | | |
| | 36 | 10211-4134-0 | Joint | PACKING | 1 | | | |
| | 37 | 13251-4106-0 (13251-4135-3) | Filtre | FILTER | 1 | | | |
| | 38 | 62271-5470-0 | Réservoir complet | COMP. TANK, fuel | 1 | | | |
| | 39 | 02118-50100 | Ecrou | NUT | 2 | | | |
| | 40 | 04013-50100 | Rondelle | WASHER, plain | 2 | | ~10005 | |
| | | | | | 4 | | 10006~ | |
| | 41 | 04512-50100 | Rondelle grower | WASHER, spring | 2 | | | |
| | 42 | 62271-5481-0 | Support | STAY, fuel tank | 1 | | | |
| | 43 | 62271-5482-0 | Boulon | BOLT | 1 | | | |
| | 44 | 04013-50080 | Rondelle | WASHER, plain | 2 | | | |
| | 45 | 04512-50080 | Rondelle grower | WASHER, spring | 1 | | | |
| | 46 | 02114-50080 | Ecrou | NUT | 1 | | | |
| | 47 | 05515-50800 | Epingle | PIN, snap | 1 | | | |
| | 48 | 62091-5433-0 | Butée | RUBBER | 2 | | | |
| | 49 | 13268-4236-0 | Bride serrage | CLAMP, fuel pipe | 1 | | | |
| | 50 | 13502-4105-0 | Bouchon réservoir | ASSY CAP, fuel tank | 1 | | | |
| | 51 | 62271-5448-0 | Enjoliveur (B) | COVER, muffler 1 | 1 | | 10803~ | A |
| | 52 | 01050-50610 | Boulon | BOLT | 2 | | | A |
| | 53 | 04512-50060 | Rondelle grower | WASHER, spring | 2 | | | A |
| | 54 | 04013-20060 | Rondelle | WASHER, plain | 2 | | | A |
| | 55 | 04512-20080 | Rondelle grower | WASHER, spring | 4 | | | |

# 23. COURROIES & CARTERS
# PULLEY BELT GROUP

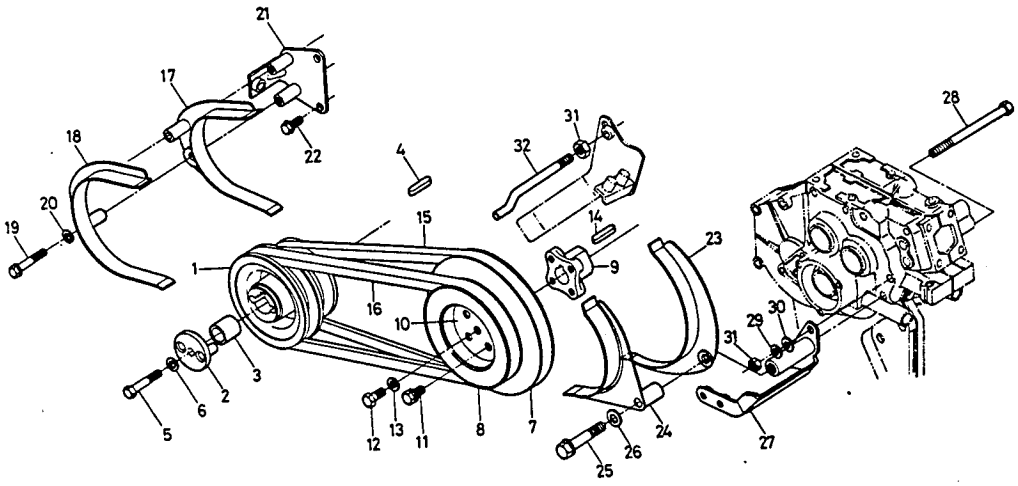


REF. No. 2 62271-6222-2
• Renforcé
• Reinforced

REF. No. 3 62271-6235-1

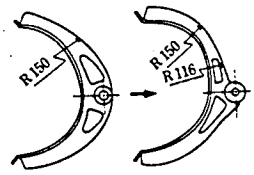


| S | REF. No. | CODE No. | DESCRIPTION FRANÇAIS | DESCRIPTION ENGLISH | UNITÉ UNIT | ÉCHANGEABILITÉ INTERCHANGEABILITY E C I C | No. No. | NUMÉRO DE SÉRIE SERIAL No. | REMARQUES REMARKS |
|---|---|---|---|---|---|---|---|---|---|
| | 1 | 62271-6321-0 | Poulie 100-120 | PULLEY, 100-120 | 1 | | | | |
| × | 2 | 62271-6222-0 | Rondelle | WASHER | 1 | | | ~10302 | |
| | | 62271-6222-2 | | | | | | 10001~ | C |
| | 3 | 62271-6223-0 | Entretoise | COLLAR | 1 | | | | |
| | 4 | 05712-00740 | Clavette | KEY, feather | 1 | | | | |
| | 5 | 01153-50845 | Boulon | BOLT | 1 | | | | |
| | 6 | 04513-50080 | Rondelle grower | WASHER, spring | 1 | | | | |
| | 7 | 62182-1325-0 | Poulie 180 | PULLEY, 180 | 1 | | | | |
| | 8 | 62182-1326-0 | Poulie 130 | PULLEY, 130 | 1 | | | | |
| | 9 | 62252-1327-0 | Manchon | BOSS, pulley | 1 | | | | |
| | 10 | 62072-6133-0 | Rondelle | WASHER | 1 | | | | |
| | 11 | 01120-50818 | Boulon | BOLT | 4 | | | | |
| | 12 | 01153-50816 | Boulon | BOLT | 1 | | | | |
| | 13 | 04512-50080 | Rondelle grower | WASHER, spring | 1 | | | | |
| | 14 | 05712-00540 | Clavette | KEY, feather | 1 | | | | |
| | 15 | 62151-8122-0 | Courroie 43 | BELT, V 43 | 1 | | | | |
| | 16 | 62073-6114-0 | Courroie 41 | BELT, V 41 | 1 | | | | |
| | 17 | 62271-6227-0 | Guide (100) | HOLDER, belt 100 | 1 | | | | |
| | 18 | 62271-6228-0 | Guide (120) | HOLDER, belt 120 | 1 | | | | |
| | 19 | 01120-50850 | Boulon | BOLT | 2 | | | | |
| | 20 | 04013-50080 | Rondelle | WASHER, plain | 2 | | | | |
| | 21 | 62271-6230-0 | Support | COMP. SUPPORT, belt C | 1 | | | | |
| | 22 | 01120-50818 | Boulon | BOLT | 2 | | | | |
| □ | 23 | 62252-5318-0 | Guide (180) | HOLDER, belt 180 | 1 | | | ~10802 | |
| | | 62271-6235-0 | | | | | | 10001~ | B |
| | 24 | 62182-5317-0 | Guide (130) | HOLDER, belt 130 | 1 | | | | |
| | 25 | 01130-51060 | Boulon | BOLT | 1 | | | | |

# 23. COURROIES & CARTERS
# PULLEY BELT GROUP

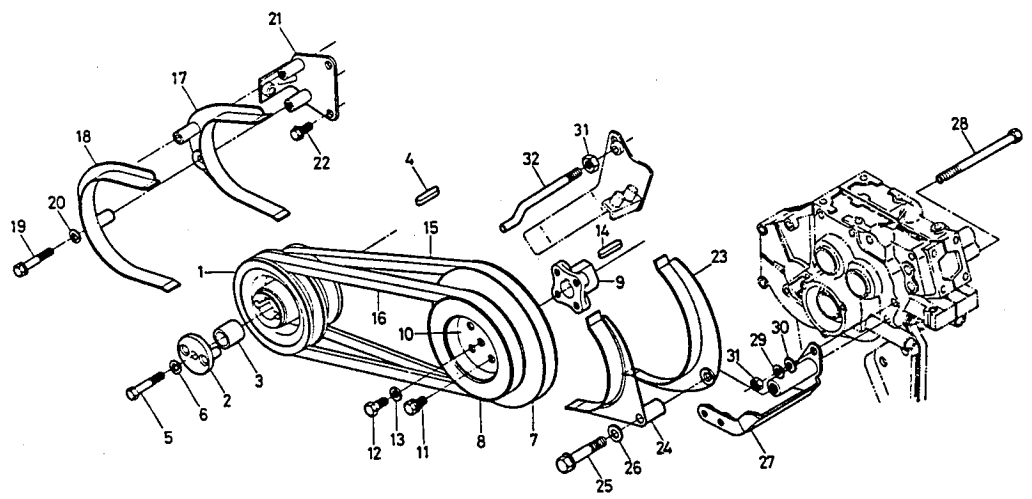


REF. No. ② 62271–6222–2
• Renforcé
• Reinforced

REF. No. ③ 62271–6235–1

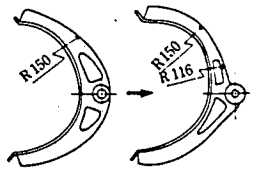


| S | REF. No. | CODE No. | DESCRIPTION FRANÇAIS | DESCRIPTION ENGLISH | UNITÉ UNIT | ÉCHANGEABILITÉ INTERCHANGEABILITY E C No. I C No. | NUMÉRO DE SÉRIE SERIAL No. | REMARQUES REMARKS |
|---|---|---|---|---|---|---|---|---|
| | 26 | 04013–50100 | Rondelle | WASHER, plain | 1 | | | |
| | 27 | 62271–6240–0 | Guide | COMP. HOLDER, belt RE | 1 | | | |
| | 28 | 62081–1118–0 | Boulon | BOLT | 2 | | | |
| | 29 | 04512–50080 | Rondelle grower | WASHER, spring | 2 | | | |
| | 30 | 04013–50080 | Rondelle | WASHER, plain | 2 | | | |
| | 31 | 02114–50080 | Ecrou | NUT | 3 | | | |
| | 32 | 62271–6244–0 | Axe | ROD, belt holder | 1 | | | |

# 24. ACCESSOIRES ET PIECES DE SERVICE
# ACCESSORIES AND SERVICE PARTS

| S | REF. No. | CODE No. | DESCRIPTION FRANÇAIS | DESCRIPTION ENGLISH | UNITÉ UNIT | ÉCHANGEABILITÉ INTERCHANGEABILITY EC No. IC No. | NUMÉRO DE SÉRIE SERIAL No. | REMARQUES REMARKS |
|---|---|---|---|---|---|---|---|---|
| | 1 | 62271-6310-0 | Outils complet | ASSY TOOLS | 1 | | | |
| | 2 | 63733-6161-0 | Burette à huile | FEEDER, oil | 1 | | | |
| | 3 | 14107-9141-0 | Entonnoir | FUNNEL | 1 | | | |
| | 4 | 62271-6321-0 | Manuel d' instruction | MANUAL, instruction | 1 | | | FRANCE |
| | | 62275-6321-0 | | | | | | UNITED, KINGDOM |
| | 5 | 62163-4724-0 | Marque d' antirouille | LABEL, antirust | 1 | | | FRANCE |
| | | 62074-4724-0 | | | | | | UNITED, KINGDOM |
| | 6 | 62271-1102-0 | Boîte avec bouchon | CASE, with plug | 1 | | | |
| | 7 | 13641-2191-0 | Piston | PISTON | 1 | | | |
| | 8 | 13641-2109-0 | Jeu de segments | ASSY PISTON RING | 1 | | | |
| | 9 | 62271-6322-0 | Liste des pièces, pour Utilisateur | PARTS LIST, for user | 1 | | | |
| | 10 | 07909-51550 | Liste des pièces, pour Fournisseur | ILLUSTRATED PARTS LIST, for dealer | 1 | | | |
| | 11 | 13641-2192-0 | Piston | PISTON (+1.0mm) | 1 | | | |
| | 12 | 13641-2110-0 | Jeu de segment | ASSY PISTON RING (+1.0mm) | 1 | | | |
| | 13 | 13641-2191-0 | Piston | PISTON (+0.5mm) | 1 | | | |
| | 14 | 13641-2109-0 | Jeu de segment | ASSY PISTON RING (+0.5mm) | 1 | | | |
| | 15 | 62089-9910-0 | Poulie complet | ASSY PULLEY | 1 | | | ⑯~㉒ |
| | 16 | 61042-8351-0 | Poulie (100) | PULLEY (100) | 1 | | | |
| | 17 | 62089-9911-0 | Manchon | BOSS PULLEY | 1 | | | |
| | 18 | 62089-9912-0 | Rondelle | COLLAR | 1 | | | |
| | 19 | 61041-6124-0 | Rondelle | WASHER | 1 | | | |
| | 20 | 01120-50618 | Boulon | BOLT | 4 | | | |
| | 21 | 01153-50828 | Boulon | BOLT | 1 | | | |
| | 22 | 04512-50080 | Rondelle | WASHER | 1 | | | |

# INDEX NUMÉRIQUE
# NUMERICAL INDEX

A la commande des pièces, indiquer les No. de Code dans les pages illustrées et ne pas ici au-dessous.

In the numerical list. the last figures of the Code Nos. for parts other than standard parts are listed as "0".


| Code No. | Page |
|---|---|
| 01050-50610 | 5, 13, 27 |
| 01050-50650 | 3 |
| 01050-50685 | 3 |
| 01053-50518 | 20 |
| 01120-50618 | 30 |
| 01120-50814 | 9 |
| 01120-50816 | 3, 13, 15, 22, 26 |
| 01120-50818 | 8, 11, 21, 25, 28 |
| 01120-50835 | 1 |
| 01120-50850 | 28 |
| 01130-51060 | 28 |
| 01150-50812 | 4, 14 |
| 01150-50814 | 9, 27 |
| 01150-50842 | 13 |
| 01150-50850 | 13 |
| 01150-51230 | 21 |
| 01152-51245 | 25 |
| 01153-50816 | 28 |
| 01153-50828 | 30 |
| 01153-50845 | 28 |
| 01153-51045 | 1 |
| 01153-51230 | 24 |
| 01170-51055 | 24 |
| 01172-51035 | 24 |
| 01173-51045 | 24 |
| 01173-51255 | 24 |
| 01173-51280 | 25 |
| 01173-51285 | 24 |
| 01202-50610 | 4, 5, 9, 13, 26 |
| 01202-50612 | 3, 11, 26, 27 |
| 01202-50616 | 19 |
| 01202-50618 | 8 |
| 01202-50625 | 2, 10 |
| 01222-50612 | 11 |
| 01518-50630 | 3 |
| 01811-50818 | 26 |
| 02014-50060 | 3, 8, 21 |
| 02074-50120 | 7 |
| 02112-50120 | 25 |
| 02114-50080 | 4, 13, 21, 26, 27, 29 |
| 02116-50100 | 24 |
| 02118-50100 | 4, 24, 27 |
| 02172-50120 | 7 |
| 02174-50120 | 24 |
| 02176-50100 | 24 |
| 02176-50120 | 24 |
| 03004-50612 | 26 |
| 03004-50616 | 21 |
| 03004-50625 | 10 |
| 03012-50306 | 7 |
| 03014-50810 | 21 |
| 03024-50305 | 12 |
| 03024-50306 | 12 |
| 03024-50408 | 8 |
| 03024-50410 | 10 |
| 03024-50412 | 10 |
| 03054-50408 | 7 |
| 03054-50512 | 8 |
| 04011-50100 | 4 |
| 04012-50060 | 8, 22 |
| 04013-20060 | 27 |
| 04013-20080 | 27 |
| 04013-50040 | 10, 26 |
| 04013-50060 | 4, 11, 21, 26, 27 |
| 04013-50080 | 3, 4, 13, 21, 25, 26, 27, 28, 29 |
| 04013-50100 | 24, 27, 28, 29 |
| 04013-50120 | 7, 19 |
| 04015-50100 | 24 |
| 04512-20080 | 27 |
| 04512-50040 | 7 |
| 04512-50050 | 20 |
| 04512-50060 | 3, 5, 8, 27 |
| 04512-50080 | 4, 9, 13, 21, 26, 27, 28, 29, 30 |
| 04512-50100 | 4, 24, 27 |
| 04512-50120 | 19, 21 |
| 04513-50080 | 28 |
| 04513-50120 | 24 |
| 04611-00470 | 16 |
| 04612-00070 | 20 |
| 04612-00170 | 15 |
| 04612-00210 | 20 |
| 04612-00220 | 16 |
| 04612-10170 | 15 |
| 04612-10210 | 20 |
| 04613-00070 | 8, 20 |
| 04613-10070 | 20 |
| 04613-50070 | 8 |
| 04711-00120 | 1 |
| 04714-00100 | 19 |
| 04717-00600 | 14 |
| 04717-00800 | 13 |
| 04724-00100 | 14 |
| 04811-00180 | 1 |
| 04811-06100 | 20 |
| 05122-50522 | 19 |
| 05122-50614 | 22 |
| 05122-50630 | 22 |
| 05122-50850 | 24 |
| 05511-50215 | 24 |
| 05511-50318 | 19 |
| 05511-50330 | 15 |
| 05511-51210 | 19, 26 |
| 05511-51612 | 22 |
| 05515-50800 | 27 |
| 05515-51600 | 24 |
| 05515-55000 | 24 |
| 05712-00540 | 28 |
| 05712-00740 | 28 |
| 05811-00416 | 5, 6, 10 |
| 06311-75018 | 19 |
| 07715-01605 | 19 |
| 07909-51550 | 30 |
| 08101-06204 | 16 |
| 08101-06206 | 5, 6 |
| 08101-06208 | 18 |
| 08101-06303 | 16 |
| 08101-06304 | 16 |
| 08101-06305 | 6 |
| 09194-06211 | 18 |
| 09230-12185 | 19 |
| 09500-00023 | 6 |
| 09500-17358 | 16 |
| 09500-20358 | 16 |
| 10211-41340 | 27 |
| 10244-42370 | 10 |
| 13000-11310 | 3 |
| 13000-11320 | 3 |
| 13211-44320 | 12 |
| 13211-68440 | 10 |
| 13223-11650 | 3 |
| 13241-11650 | 3 |
| 13242-05550 | 3 |
| 13251-41060 | 27 |
| 13251-41353 | 27 |
| 13251-68060 | 10 |
| 13251-68290 | 10 |
| 13257-61850 | 9 |
| 13268-13450 | 2 |
| 13268-42360 | 7, 27 |
| 13274-16640 | 5 |
| 13278-13560 | 1 |
| 13281-12230 | 4 |
| 13291-13540 | 1 |
| 13301-11240 | 3 |
| 13301-11260 | 3 |
| 13301-11370 | 3 |
| 13301-56860 | 8 |
| 13316-93410 | 8 |
| 13325-94510 | 1 |
| 13502-41050 | 27 |
| 13518-88310 | 23 |
| 13581-93410 | 8 |
| 13591-44810 | 12 |
| 13591-44830 | 12 |
| 13591-44850 | 12 |
| 13613-88310 | 23 |
| 13621-42360 | 7 |
| 13641-01310 | 1 |
| 13641-01320 | 1 |
| 13641-01340 | 1 |
| 13641-02120 | 1 |
| 13641-02125 | 1 |
| 13641-03110 | 1 |
| 13641-03310 | 1 |
| 13641-03540 | 1 |
| 13641-05010 | 2 |

| Code No. | Page |
|---|---|
| 13641-13110 | 2 |
| 13641-13120 | 2 |
| 13641-13240 | 2 |
| 13641-13330 | 2 |
| 13641-13810 | 2 |
| 13641-13820 | 2 |
| 13641-15550 | 5 |
| 13641-16150 | 5 |
| 13641-16510 | 5 |
| 13641-16550 | 5, 6 |
| 13641-16560 | 5, 6 |
| 13641-21050 | 6 |
| 13641-21090 | 30 |
| 13641-21100 | 30 |
| 13641-21110 | 6 |
| 13641-21310 | 6 |
| 13641-21330 | 6 |
| 13641-21910 | 30 |
| 13641-21920 | 30 |
| 13641-22010 | 6 |
| 13641-22110 | 6 |
| 13641-22140 | 6 |
| 13641-22190 | 6 |
| 13641-23110 | 6 |
| 13641-23620 | 5, 6 |
| 13641-23630 | 5, 6 |
| 13641-23650 | 5, 6 |
| 13641-23670 | 5, 6 |
| 13641-23680 | 5, 6 |
| 13641-23690 | 5, 6 |
| 13641-23720 | 5, 6 |
| 13641-24110 | 6 |
| 13641-33080 | 1 |
| 13641-33140 | 1 |
| 13641-33150 | 1 |
| 13641-33170 | 1 |
| 13641-33750 | 1 |
| 13641-43010 | 7 |
| 13641-43110 | 7 |
| 13641-43120 | 7 |
| 13641-43130 | 7 |
| 13641-43140 | 7 |
| 13641-43150 | 7 |
| 13641-43160 | 7 |
| 13641-43240 | 7 |
| 13641-43630 | 7 |
| 13641-43800 | 7 |
| 13641-43810 | 7 |
| 13641-43820 | 7 |
| 13641-43830 | 7 |
| 13641-43900 | 7 |
| 13641-44180 | 12 |
| 13641-44210 | 12 |
| 13641-44220 | 12 |
| 13641-44230 | 12 |
| 13641-44270 | 12 |
| 13641-44280 | 12 |
| 13641-44300 | 12 |
| 13641-44530 | 12 |
| 13641-44710 | 12 |
| 13641-44730 | 12 |
| 13641-44750 | 12 |
| 13641-44780 | 12 |
| 13641-44840 | 12 |
| 13641-46110 | 3 |
| 13641-46150 | 3 |
| 13641-46160 | 3 |
| 13641-55200 | 5 |
| 13641-55290 | 5 |
| 13641-55310 | 5 |
| 13641-55313 | 5 |
| 13641-55332 | 5 |
| 13641-55342 | 5 |
| 13641-55350 | 5 |
| 13641-55360 | 5 |
| 13641-55363 | 5 |
| 13641-55450 | 5 |
| 13641-56140 | 8 |
| 13641-56143 | 8 |
| 13641-56230 | 1 |
| 13641-56320 | 8 |
| 13641-56350 | 8 |
| 13641-56390 | 8 |
| 13641-56410 | 8 |
| 13641-56860 | 8 |
| 13641-57110 | 8 |
| 13641-61010 | 9 |
| 13641-61090 | 9 |
| 13641-61510 | 9 |
| 13641-61520 | 9 |
| 13641-61530 | 9 |
| 13641-61540 | 9 |
| 13641-61560 | 9 |
| 13641-61570 | 9 |
| 13641-61620 | 9 |
| 13641-61630 | 9 |
| 13641-61640 | 9 |
| 13641-61650 | 9 |
| 13641-61670 | 9 |
| 13641-61740 | 9 |
| 13641-67670 | 11 |
| 13641-67710 | 10 |
| 13641-68030 | 10 |
| 13641-68110 | 10 |
| 13641-74070 | 11 |
| 13641-74490 | 11 |
| 13641-74520 | 11 |
| 13641-74570 | 11 |
| 13641-87160 | 11 |
| 13641-91370 | 7 |
| 13641-91520 | 4 |
| 13641-92110 | 10 |
| 13641-94010 | 8 |
| 13641-95230 | 6 |
| 13641-96750 | 7 |
| 13643-57040 | 8 |
| 13643-67570 | 11 |
| 13644-03460 | 1 |
| 13644-05510 | 2 |
| 13644-11010 | 3 |
| 13644-11200 | 3 |
| 13644-11580 | 3 |
| 13644-11610 | 3 |
| 13644-12110 | 4 |
| 13644-12470 | 4 |
| 13644-12510 | 4 |
| 13644-42110 | 7 |
| 13644-42120 | 7 |
| 13644-42510 | 7 |
| 13644-43010 | 7 |
| 13644-44010 | 3 |
| 13644-44020 | 12 |
| 13644-44100 | 12 |
| 13644-44120 | 12 |
| 13644-44260 | 12 |
| 13644-44500 | 12 |
| 13644-56110 | 8 |
| 13644-57010 | 8 |
| 13644-57040 | 8 |
| 13644-57150 | 8 |
| 13644-57240 | 8 |
| 13664-67010 | 10 |
| 13644-67030 | 10 |
| 13644-67050 | 10 |
| 13644-67060 | 10 |
| 13644-67720 | 10 |
| 13644-87112 | 11 |
| 13644-87460 | 7 |
| 13644-87510 | 11 |
| 13645-43121 | 7 |
| 13645-43610 | 7 |
| 13645-74570 | 11 |
| 13825-11010 | 3 |
| 13825-11310 | 3 |
| 13825-67011 | 10 |
| 13825-67050 | 10 |
| 13825-67060 | 10 |
| 13825-87110 | 11 |
| 14107-91410 | 30 |
| 34150-24560 | 22 |
| 54201-23270 | 19, 21 |
| 61011-49190 | 23 |
| 61011-52150 | 25 |
| 61025-48220 | 23 |
| 61025-48240 | 23 |
| 61036-47140 | 23 |
| 61041-42450 | 20 |
| 61041-47110 | 23 |
| 61041-61240 | 30 |
| 61042-53350 | 26 |
| 61042-83510 | 30 |
| 61111-48220 | 22 |
| 61132-55110 | 23 |
| 61161-48220 | 23 |
| 61161-48230 | 23 |
| 62061-13100 | 15 |
| 62063-17560 | 18 |
| 62063-17570 | 18 |
| 62071-13140 | 15 |
| 62072-61330 | 28 |
| 62073-47220 | 23 |
| 62073-47310 | 23 |
| 62073-61140 | 28 |
| 62074-47240 | 30 |
| 62081-11170 | 13 |

| Code No. | Page |
|---|---|
| 62081-11180 | 13, 26, 29 |
| 62081-11220 | 14 |
| 62081-14380 | 16 |
| 62081-18330 | 19 |
| 62081-18370 | 19 |
| 62081-41120 | 21 |
| 62081-41130 | 21 |
| 62081-41310 | 21 |
| 62081-41320 | 21 |
| 62081-41330 | 21 |
| 62081-41340 | 21 |
| 62081-41350 | 21 |
| 62081-41360 | 21 |
| 62081-42100 | 22 |
| 62081-42110 | 22 |
| 62081-42120 | 22 |
| 62081-42130 | 22 |
| 62081-42140 | 22 |
| 62081-42150 | 22 |
| 62081-42160 | 22 |
| 62081-42170 | 22 |
| 62081-42180 | 22 |
| 62081-42210 | 22 |
| 62082-17110 | 18 |
| 62082-17250 | 18 |
| 62082-41410 | 21 |
| 62082-41710 | 21 |
| 62082-41800 | 21 |
| 62082-47160 | 23 |
| 62082-54120 | 26 |
| 62089-99100 | 30 |
| 62089-99110 | 30 |
| 62089-99120 | 30 |
| 62091-54330 | 27 |
| 62101-42290 | 22 |
| 62101-42290 | 22 |
| 62131-17290 | 18 |
| 62131-17320 | 18 |
| 62131-17363 | 18 |
| 62131-18530 | 19 |
| 62151-13150 | 15 |
| 62151-13160 | 15 |
| 62151-13170 | 15 |
| 62151-42412 | 20 |
| 62151-52150 | 24 |
| 62151-54510 | 26 |
| 62151-54540 | 26 |
| 62151-81220 | 28 |
| 62163-47240 | 30 |
| 62171-47140 | 23 |
| 62171-47190 | 23 |
| 62182-13250 | 28 |
| 62182-13260 | 28 |
| 62182-14340 | 17 |
| 62182-53170 | 28 |
| 62231-18530 | 19 |
| 62252-13270 | 28 |
| 62252-14190 | 16, 17 |
| 62252-53180 | 28 |
| 62271-11020 | 30 |
| 62271-11110 | 13 |
| 62271-11114 | 13 |
| 62271-11117 | 13 |
| 62271-11120 | 13 |
| 62271-11127 | 13 |
| 62271-11128 | 13 |
| 62271-11130 | 13 |
| 62271-11140 | 13 |
| 62271-11170 | 13 |
| 62271-11180 | 13 |
| 62271-11184 | 13 |
| 62271-11190 | 13 |
| 62271-11194 | 13 |
| 62271-11210 | 13 |
| 62271-11220 | 13 |
| 62271-11230 | 14 |
| 62271-13010 | 15 |
| 62271-13100 | 15 |
| 62271-13110 | 15 |
| 62271-13200 | 15 |
| 62271-13210 | 15 |
| 62271-13310 | 15 |
| 62271-14110 | 16 |
| 62271-14120 | 16 |
| 62271-14130 | 16 |
| 62271-14140 | 16, 17 |
| 62271-14210 | 16 |
| 62271-14212 | 16 |
| 62271-14220 | 16 |
| 62271-14230 | 16 |
| 62271-14240 | 16 |
| 62271-14300 | 16 |
| 62271-14330 | 16 |
| 62271-14340 | 17 |
| 62271-14410 | 17 |
| 62271-14420 | 17 |
| 62271-14430 | 16 |
| 62271-17100 | 18 |
| 62271-17190 | 18 |
| 62271-17200 | 18 |
| 62271-17300 | 18 |
| 62271-18210 | 19 |
| 62271-18220 | 19 |
| 62271-18230 | 19 |
| 62271-18240 | 19 |
| 62271-18250 | 19 |
| 62271-18260 | 19 |
| 62271-18310 | 19 |
| 62271-18320 | 19 |
| 62271-18330 | 19 |
| 62271-18340 | 19 |
| 62271-18370 | 19 |
| 62271-18810 | 20 |
| 62271-18820 | 20 |
| 62271-41110 | 21 |
| 62271-41200 | 21 |
| 62271-41300 | 21 |
| 62271-41420 | 21 |
| 62271-41500 | 21 |
| 62271-41600 | 21 |
| 62271-42100 | 22 |
| 62271-42110 | 22 |
| 62271-42113 | 22 |
| 62271-42120 | 22 |
| 62271-42123 | 22 |
| 62271-42130 | 22 |
| 62271-42140 | 22 |
| 62271-42210 | 22 |
| 62271-42220 | 22 |
| 62271-48110 | 21 |
| 62271-48120 | 23 |
| 62271-48130 | 23 |
| 62271-48140 | 23 |
| 62271-48160 | 23 |
| 62271-48170 | 23 |
| 62271-51100 | 24 |
| 62271-51310 | 24 |
| 62271-52100 | 24 |
| 62271-52200 | 24 |
| 62271-52400 | 25 |
| 62271-52500 | 25 |
| 62271-54100 | 26 |
| 62271-54210 | 26 |
| 62271-54300 | 26 |
| 62271-54310 | 26 |
| 62271-54314 | 26 |
| 62271-54350 | 26 |
| 62271-54380 | 26 |
| 62271-54400 | 26 |
| 62271-54450 | 26 |
| 62271-54453 | 26 |
| 62271-54480 | 27 |
| 62271-54510 | 27 |
| 62271-54700 | 27 |
| 62271-54810 | 27 |
| 62271-54820 | 27 |
| 62271-61100 | 25 |
| 62271-61110 | 25 |
| 62271-62210 | 28 |
| 62271-62220 | 28 |
| 62271-62230 | 28 |
| 62271-62270 | 28 |
| 62271-62280 | 28 |
| 62271-62300 | 28 |
| 62271-62350 | 28 |
| 62271-62400 | 29 |
| 62271-62440 | 29 |
| 62271-63100 | 30 |
| 62271-63210 | 30 |
| 62271-63220 | 30 |
| 62272-48111 | 21 |
| 62272-48131 | 23 |
| 62272-48150 | 23 |
| 62272-48160 | 23 |
| 62272-48171 | 23 |
| 62275-41300 | 21 |
| 62275-55100 | 23 |
| 62275-55120 | 23 |
| 62275-63210 | 30 |
| 62281-42130 | 22 |
| 62481-48130 | 23 |
| 63512-17230 | 18 |
| 63611-52350 | 24 |
| 63633-41310 | 21 |

| Code No. | Page | Code No. | Page | Code No. | Page |
|---|---|---|---|---|---|
| 63733-61610 | 30 | | | | |
| 63763-41370 | 22 | | | | |
| 63763-52130 | 25 | | | | |
| 63763-52570 | 26 | | | | |
| 66591-42111 | 19, 21 | | | | |
| 92316-00230 | 25 | | | | |

13621-159
13641-85, 88, 90, 94, 102, 106, 108～109, 118, 146, 149, 157, 163, 164, 183, 192, 196, 228, 234, 235, 238, 244, 245, 250, 251, 268, 272～275, 280～282, 286, 288, 300, 303, 304, 306, 312, 317, 318, 247, 351, 352, 363, 374, 380, 387, 396, 398, 411
62088-67～69
62271-45～48, 50, 62, 66～71, 77～82, 95-114, 118
62281-31

Kubota

## GEANT DES NECESSITES FONDAMENTALES

"La Technologie pour les Besoins de Demain" est l'ambition de chacun CHEZ KUBOTA. A travers la recherche et le développement de nouveaux produits pour l'Agriculture, l'Industrie, la Construction et plusieurs autres domaines de la vie moderne, Nous KUBOTA, espérons atteindre ce but.

## THE BASIC NECESSITIES GIANT

" Technology for the Needs of Tomorrow " is the ambition of everyone at KUBOTA. Through research and the development of new products for agriculture, industry, construction, and many other areas of modern life, we at Kubota hope to realize this goal.

IMPRIME EN FRANCE
PRINTED IN FRANCE

Kubota