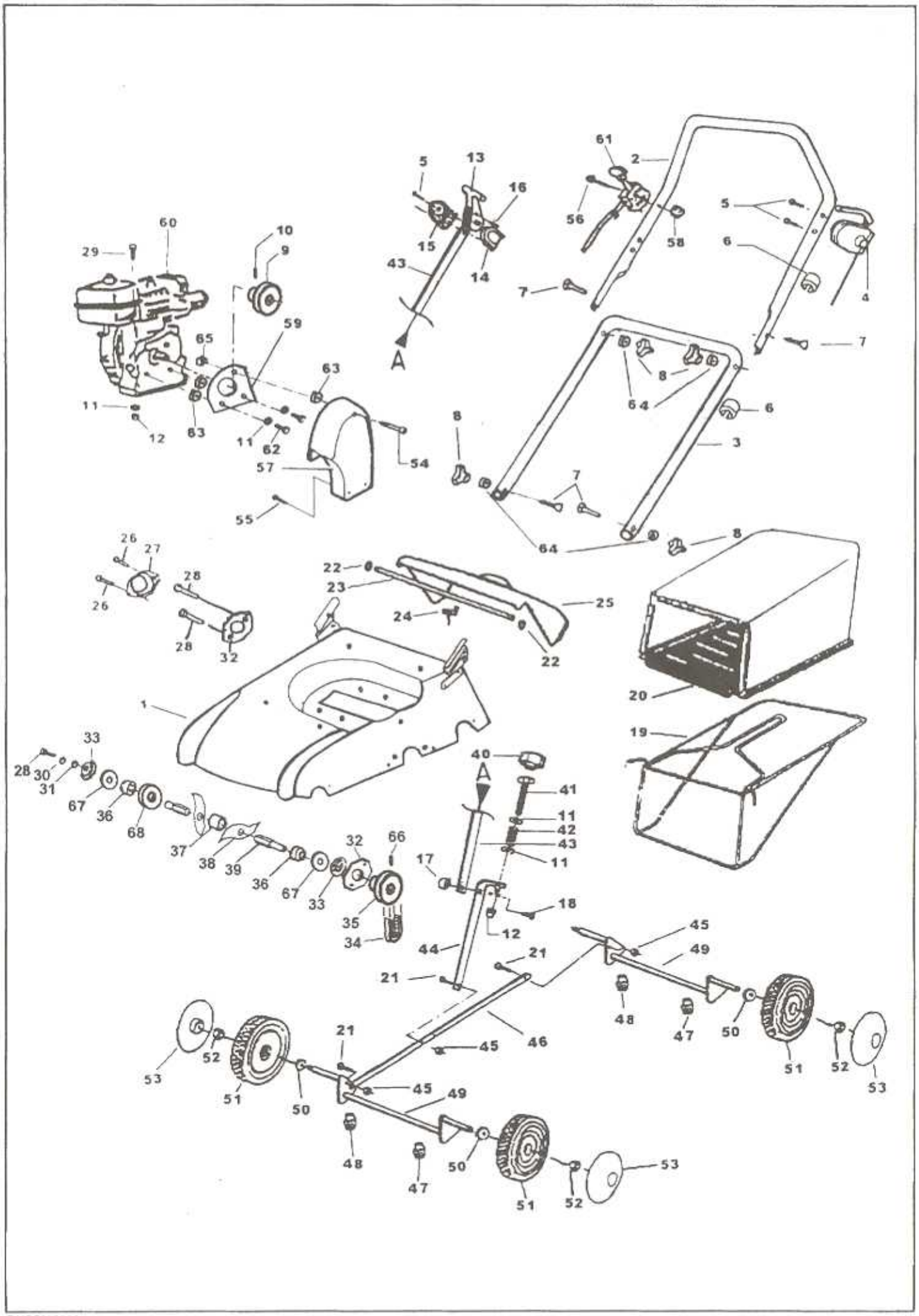
61
2
5
13
16
56
58
5
6
4
60
10
9
29
15
14
43
7
59
65
63
A
7
8
64
6
11
12
63
11
62
54
57
3
8
7
55
64
8
26
27
22
23
28
25
26
24
28
32
22
20
1
19
33
28
30
31
67
36
68
40
A
41
11
42
43
11
37
38
39
36
67
33
32
66
17
35
34
18
12
44
45
21
49
21
48
47
50
51
52
53
21
46
45
52
53
51
50
45
49
48
47
50
53
51
52

SCARIFICATEUR
SCARIFICATOR
VERTIKUTIERER

S 390 B

Fig.	Références	Désignation	Part Name	Bezeichnung	Descrizione	Descripcion	Designação	Omschrijving	
1	73839	Chassis	Carter	Carter	Scocca	Casco	Carter	Handrijfkap	1
2	73846	Guidon	Handlebar	Lenker	Manico	Barra	Guiador	Handgreep	1
3	73847	Guidón	Handlebar	Lenker	Manico	Barra	Guiador	Handgreep	1
4	73806	Interrupteur	Interruptor	Schalter	Interrutore	Interruptor	Interrotor	Schakelaar	1
5	Z29.4.25	Vis	Screw	Schraube	Vite	Tornillo	Parafuso	Schroef	4
6	42032	Collier	Clip	Klemmschelle	Ferma cavo	Abrazadera	Gancho	Kabelbinder	2
7	Z42.8.50CC	Vis	Screw	Schraube	Vite	Tornillo	Parafuso	Schroef	4
8	46032	Ecrou	Nut	Mutter	Dado	Tuerca	Parafuso	Moer	4
9	73864	Poulie	Pulley	Treibrad	Pulegga	Polea	Polia	Riemschijf	1
10	052.8.8	Vis	Screw	Schraube	Vite	Tornillo	Parafuso	Schroef	1
11	Z08.N8N	Rondelle	Washer	Scheibe	Rondella	Arandela	Anilha	Ring	11
12	Z53.8	Ecrou	Nut	Mutter	Dado	Tuerca	Parafuso	Moer	8
13	72489	Poignée	Clutch	Hebel	Leva	Empuradura	Alavanca	Hendel	1
14	72487	Platine G.	Support	Trager	Supporto	Soporte	Hevel	Stern	1
15	72488	Platine D.	Support	Trager	Supporto	Soporte	Hevel	Stern	1
16	D13.6.20	Goupille	Pin	Splint	Spina	Pasador	Pino	Pin	1
17	73843	Ecrou	Nut	Mutter	Dado	Tuerca	Parafuso	Moer	1
18	Z42.6.16	Vis	Screw	Schraube	Vite	Tornillo	Parafuso	Schroef	1
19	73825	Armature	Sack Frame	Armatur	Telaio cesto	Armadura	Armadura	Zakarmatur	1
20	73826	Sac	Bag	Sack	Tela cesto	Bolsa de recogida	Saco do pixo	Verzamelzak	1
21	Z03.6.20	Vis	Screw	Schraube	Vite	Tornillo	Parafuso	Schroef	3
22	46004	Clips	Clip	Clips	Ritegno	Anel	Clip	Clip	2
23	73822	Axe	Axle	Achse	Astina	Eje	Eixo	Wielas	1
24	73823	Ressort	Spring	Feder	Molla	Muelle	Mola	Veer	1
25	73824	Volet	Deflector	Ablenkblech	Parasassi	Deflector	Deflector	Deflector	1
26	42010	Rivet	Screw	Schraube	Vite	Tornillo	Parafuso	Schroef	2
27	72483	Cache palier	Cover	Haube	Coperchio	Embellecedor	Calote	Dop	1
28	Z03.8.20	Vis	Screw	Schraube	Vite	Tornillo	Parafuso	Schroef	6
29	Z03.8.40	Vis	Screw	Schraube	Vite	Tornillo	Parafuso	Schroef	4
30	Z12.8AZ	Rondelle	Washer	Scheibe	Rondella	Arandela	Anilha	Ring	2
31	73842	Rondelle	Washer	Scheibe	Rondella	Arandela	Anilha	Ring	1
32	72316	Bride	Plate	Plaquette	Piastrina	Tapa	Platina	Plaat	2
33	73841 (wx.#LT)	Palier	Spacer	Anstandhäle	Cuscinetto	Cojinete	Separador	Afstandsstuck	2
34	73872	Courroie	Belt	Riemen	Cinghia	Correa	Correia	Riem	1
35	73876	Poulie	Pulley	Treibrad	Pulegga	Polea	Polia	Riemschijf	1
36	73836	Entretoise	Spacer	Abstandsstück	Distanziale	Distanciador	Separador	Afstandsstuck	2
37	73837	Entretoise	Spacer	Abstandsstück	Distanziale	Distanciador	Separador	Afstandsstuck	15
38	73838	Couteau	Blade	Messer	Zappeta	Cuchilla	Lamina	Mes	16
39	73875	Arbre	Shaft	Welle	Assale	Eje	Eixo	Wielas	1
40	33868	Bouton	Nut	Mutter	Dado	Tuerca	Parafuso	Moer	1
41	Z03.8.90	Vis	Screw	Schraube	Vite	Tornillo	Parafuso	Schroef	1
42	73170	Ressort	Spring	Feder	Molla	Muelle	Mola	Veer	1
43	75082	Tringle	Bar	Stange	Barra	Suporte	Barra	Stern	1
44	73811	Tringle	Bar	Stange	Barra	Suporte	Barra	Stern	1
45	Z53.6	Ecrou	Nut	Mutter	Dado	Tuerca	Parafuso	Maer	3
46	75083	Tringle	Bar	Stange	Barra	Supporte	Barra	Stern	1
47	43255	Palier	Spacer	Anstandhäle	Cuscinetto	Cojinete	Separador	Afstandsstuck	2
48	43189	Palier	Spacer	Anstandhäle	Cuscenitto	Cojinete	Separador	Afstandsstuck	2
49	75064	Essieu	Axle	Achse	Astina	Eje	Eixo	Wielas	2
50	D54.12.20	Rondelle	Washer	Scheibe	Rondella	Arandela	Anilha	Ring	4
51	46114	Roue	Wheel	Rad	Ruota	Rueda	Roda	Wiel	4
52	Z53.08F125	Ecrou	Nut	Mutter	Dado	Tuerca	Parafuso	Moer	4
53	43131	Enjoliveur	Hub Cap	Radzierkappe	Copri ruota	Embellecedor	Calote	Dop	4
54	Z26.8.70	Vis	Screw	Schraube	Vite	Tornillo	Parafuso	Schroef	1
55	Z29.4.16	Vis	Screw	Schraube	Vite	Tornillo	Parafuso	Schroef	2
56	Z03.6.40	Vis	Screw	Schraube	Vite	Tornillo	Parafuso	Schroef	1
57	73828	Capot	Cover	Haube	Coperchio	Capo	Cobertura	Kap	1
58	73271	Ecrou	Nut	Mutter	Dado	Tuerca	Parafuso	Moor	1
59	73865	Platine	Support	Trager	Supporto	Pletina	Platina	Plaat	1
60		Moteur	Engine	Motor	Motore	Motor	Motor	Motor	1
61	30525.1	Commande d'accélération	Throttle Control	Gashebelgestange	Accelerator	Manda	Accelerator	Gaskabel	1
62	Z03.742416	Vis	Screw	Schraube	Vite	Tornillo	Parafuso	Schroef	2
63	33940	Entretoise	Spacer	Abstandsstück	Distanziale	Distanciador	Separador	Afstandsstuck	4
64	46301	Rondelle	Washer	Scheibe	Rondella	Arandela	Anilha	Ring	4
65	31530	Cache écrou	Plastic Cap	Muttermabdeckung	Copri	Tampon Plastico	Tampao Plastico	Kunstofkrap	1
66	33940	Entretoise	Spacer	Abstandsstück	Distanziale	Distanciador	Separador	Afstandsstuck	3
67									